Plastica

2024

Price List

Plastica UK MAINLAND DELIVERY CHARGES

STANDARD CARRIAGE CHARGES (to UK mainland only)

Free delivery to the account address with an order value in excess of **£725.00** excluding VAT on an Economy Service or **£800.00** excluding VAT on an Express Service.

Weight	Economy	Express	Before 1pm	Before 10.30am	Saturday
Under 10kg	£10.00	£14.00	£22.00	£28.00	£30.00
Under 20kg	£18.00	£22.00	£30.00	£38.00	£40.00
Under 30kg	£23.00	£28.00	£38.00	£50.00	£50.00
30-125kg	£23.00 + 42p per additional kg	£28.00 + 44p per additional kg	£38.00 + 48p per additional kg	£50.00 + 54p per additional kg	£50.00 + 74p per additional kg

NEW FOR 2024

ROYAL MAIL PARCELS (to UK only)

Tracked 24 **£9.50** Tracked 48 **£8.00**

Maximum Order Value **£150.00** Maximum Weight **30kg** Maximum Box Size **60 x 46 x 46cm**

Delivery six days a week. Local collect™ the UK's largest click and collect network.

Items marked with a pallet symbol and orders weighing 125kg and over will be charged at the following pallet rates, based on the delivery postcode.

Postcode *excluding ISLANDS	Quarter Pallet 250kg Max		Half Pallet 500kg Max		Full Pallet 1000kg Max	
	Eco	Express	Eco	Express	Eco	Express
BR TN	£48.00	£54.00	£54.00	£60.00	£60.00	£66.00
AL B BA BB BD BH BL BN BS CB CF CH CM CO CR CT CV CW DA DE DN DT DY EN FY GL GU HA HD HG HP HR HU HX IG IP KT L LE LN LS LU M ME MK NG NN NP NR OL OX PE PO (1-22) PR RG RH RM SG S SK SL SM SN SP SS ST SO SY (1-8, 12-14) TA TF TW UB WA WD WF WN WR WS WV YO	£60.00	£66.00	£66.00	£72.00	£72.00	£78.00
E EC N NW SE SW W WC	£72.00	£78.00	£78.00	£84.00	£84.00	£90.00
DH DL LA NE SR TS	£68.00	£74.00	£74.00	£80.00	£80.00	£86.00
EX LD LL PL SA SY (9-11, 15-25) TQ *TR	£70.00	£76.00	£76.00	£82.00	£82.00	£88.00
CA DG EH FK G *KA KY MI PA (1-19) TD	£74.00	£80.00	£80.00	£86.00	£82.00	£92.00
AB DD	£94.00	£114.00	£100.00	£120.00	£116.00	£128.00
IV KW PA (20+) PH and Highlands	£122.00		£128.00		£132.00	
Isle of Wight (P030-41)	£118.00		£124.00		£140.00	

Upgrades per consignment (Add to Express pallet rates shown above)	
AM or PM Delivery	£15.00
Before 10.30am	£30.00
Booked In	£20.00
4 hour delivery window	£10.00
Saturday	£50.00

Plastica

DELIVERY CHARGES

EXCLUSIONS APPLY

The following items will always incur a delivery charge but will be included in the total order value calculation towards free delivery for the rest of the order: silica sand and glass gedia, salt, solar covers 10sqm and over, reel systems, foam, felt, water logs, liners 40sqm and over, lengths over 1.5m, sand filters, heat pumps, coping stones, special order items, counter current units, safety covers, sodium hypochlorite, hydrochloric acid, bulky bags, hydrogen peroxide and above ground pools.

BULKY ITEMS - Solar Covers 10sqm and over, Domestic Reel Systems, Foam, Felt, Water Logs & Debris Covers

	Economy	Express	Before 1pm	Before 10:30am	Saturday
First Item	£29.00	£36.00	£75.00	£98.00	£98.00
Each Additional Item	£20.00	£24.00	£66.00	£89.00	£89.00

HEAVY ITEMS - Liners 40sqm and over

	Economy	Express	Before 1pm	Before 10:30am	Saturday
Each Item	£39.00	£49.00	£65.00	£80.00	£80.00

LONG ITEMS - Over 3m to 5.8m (over this length requires a bespoke quote for delivery). Solar covers with a commercial leading edge and heat retention covers.

	Economy	Express	Before 1pm	Before 10:30am	Saturday
First Item	£42.00	£55.00	£85.00	£100.00	£100.00
Each Additional Item	£28.00	£40.00	£55.00	£65.00	£65.00

BUNDLE ITEMS - A selection of products such as Telescopic poles, Pipe - lengths 1.5 to 3m. Maximum 8 items per bundle (Maximum 3 packs per bundle)

	Economy	Express	Before 1pm	Before 10:30am	Saturday
First Bundle	£27.00	£34.00	£48.00	£65.00	£65.00
Each Additional Bundle	£12.00	£15.00	£24.00	£32.00	£32.00

All Standard Delivery Charges include postage, packing and insurance handling. Note: Hazardous Water Treatment orders cannot be guaranteed for Express delivery. Example: Order weight 100kg = £28.00 + 44p x 70kg = £58.80

PLEASE NOTE

- Unless otherwise stated, all pallet deliveries are to kerbside only.
- The deadline for processing orders for same day dispatch is Monday - Thursday 2.30pm and Friday 1pm (11am for Hazardous Goods Monday to Friday). Orders placed after these times will be processed and sent on the next working day.
- Orders cannot be added to once they have been processed for picking in our warehouse.
- Contact details of the recipient must be supplied for all orders, including a telephone number, preferably a mobile number to enable the courier to text tracking details and delivery times.
- Where possible; please also supply the recipients email address to allow them to receive tracking information and links to reschedule delivery.
- If a delivery is unable to be made due to the recipient not being in and contact details have not been provided, a redelivery charge will be incurred at a cost of 75% of the original order delivery charge. Orders returned undelivered will incur an additional charge of 25% of the original delivery charge.
- Express delivery is normally next working day but is not guaranteed.
- Economy delivery is normally within 3 working days but can take up to 5 working days.
- Royal Mail Tracked 24/48 are a non-guaranteed service.
- Before 1pm, 10.30am and Saturday deliveries are premium services. If the delivery is late, the difference between the service charged and an Express service will be credited.
- Northern Ireland, Isle of Wight, the Scottish Highland and Islands will incur additional delivery charges, please contact us for a quote.

Whilst Plastica Ltd and our carriers make every effort to ensure that all goods are delivered on time and together, we will not be held responsible for delays due to unforeseen circumstances. Delivery should always be secured before your workforce is sent to site to prevent wasted time and costs.

PRICE LIST SYMBOLS EXPLAINED

OWN LABEL	Item not held as standard Plastica stock. Designed to specific customer requirements and will have a manufacturing leadtime.
MADE TO MEASURE	Item not held as standard Plastica stock. Made to specific customer requirements and will have a manufacturing lead time.
NON RETURN	Products indicated by this symbol are non-returnable and credit(s) will not be authorised unless goods are found to be faulty or as a result of a Plastica error.
RE-STOCK	Products indicated by this symbol are excluded from our 7 day return policy but can be returned within 28 days of delivery & will be subject to a 30% restock charge or £150.
HAZARDOUS	This item is subject to transport regulations – such as water treatment products and paint.
DIRECT DELIVERY	This item is not held in stock and ordered on request, delivery can be made direct to site or to Plastica for collection. Additional delivery charges may be incurred.
SPECIAL TRANSPORT	Due to its size this item will be delivered on a dedicated lorry.
HIAB DELIVERY	Items will be delivered on a HiAb, delivery will be arranged with customer.
STANDARD DELIVERY	Items are subject to our standard delivery rates, when the total order weight exceeds 125kg you will be charged at our pallet rate depending on delivery postcode. Please refer to our exclusions lists for items that are excluded from free delivery and will always incur a delivery charge.
HEAVY ITEM	Items including liners over 40sqm, liners over 70kg will be delivered on a pallet. Liners under 70kg will require a 2 person lift.
BULKY ITEM	Items including solar covers over 10sqm, foam, felt and water logs.
WHOLE PALLET **HALF PALLET** **QUARTER PALLET**	Items to be delivered on a pallet, this may be a quarter, half or full pallet depending on size and quantity ordered.
LONG ITEM	Items between 3m and 5.8m including foam covers and solar weave covers. Over this length requires a bespoke quote.
BUNDLE ITEM	Items 1.5-3m including pipe, linerlock and poles will incur a bundle charge. Maximum 8 items per bundle (maximum 3 packs per bundle).
INSTALLATION AVAILABLE	The item is available for installation.
WARRANTIES	Pro-rata Wooden Pool warranties as indicated in the pink box. Please refer to the wooden pool warranty for the full terms & conditions.

The survey prices are priced per survey and the prices are based on the surveyor being able to do the survey in one day. If for any reason they have to stay overnight or additional work is required then the price could change.

SURVEY CHARGES

Surveys are available for Domestic Liners, Airdomes, Winter Debris Covers, Covers and Supercovers. Contact our Production Office for details.

All other postcodes and any non-mainland sites are to be quoted for a survey.

Note: Pools being surveyed for Domestic Liners must be empty with the old liner removed. If pool is not ready, extra costs may be incurred. Prices shown are priced per individual site. Any special requirements or time restraints may incur additional costs.

£295.00 Postal Area:	TN BN RH
£370.00 Postal Area:	PO GU SL WD EN SS KT ME CT
£460.00 Postal Area:	SO RG HP AL LU SG CM LONDON
£470.00 Postal Area:	BH SP OX MK CB IP CO
£520.00 Postal Area:	DT BA BS SN GL NN PE NR
£620.00 Postal Area:	TA NP HR WR B CV LE
POA Postal Area:	TQ EX CF DY WV WS DE NG
	PL LD SY TF ST CH CW SK S LN
	TR SA LL L WA WN FY PR BB BL M OL HD
	HX BD WF LS HG YO DN HU

Hydrostar MKIV Pump

Waterco Hydrostar MK4

DISCOUNT CODE/ PRODUCT CODE		DESCRIPTION	PRICE
F	2404400333EUM	Waterco Hydrostar 400 MKIV Pump	£ POA
F	2404550333EUM	Waterco Hydrostar 550 MKIV Pump	£ POA
F	2404700333EUM	Waterco Hydrostar 700 MKIV Pump	£ POA

WATERCO
water, the liquid of life

Hydrostar MKIV

Waterco commercial pumps incorporate the latest technology in design and construction to produce a high performance, energy saving pump ideal for any situation that demands maximum output. Hydrostar MKIV Pump Purposed built for commercial sized swimming pools, Hydrostar MKIV pumps efficiently deliver high flow rates and incorporate an innovative quarter lid & lock ring assembly for easy maintenance. Built with an innovative quarter lid & lock ring and extra-large strainer basket, the Hydrostar is ideal for large domestic and commercial sized swimming pools. Features include: improved hydraulic efficiency with and internal volute, 90mm/3in quick connect unions, 6 litre strainer basket and secondary seal motor protection. The pump body is manufactured utilising state of the art engineered plastic moulding with a single piece strainer pot for extra strength and an in built volute for maximum performance. A high grade 316 stainless steel mechanical seal is incorporated for extra protection against corrosion. e.g. chlorinated water, ozone, iodine, Baquacil, bromine and saltwater.

Features

- 90mm/3in quick connect unions
- 6 litre strainer basket
- Clear pump lid for easy inspection of the strainer basket
- Quarter turn lid and lock ring with easy grip handles
- High grade Mechanical Seal - Carbon/Graphite with 316 stainless steel Protected by secondary seal
- Heavy duty IP33 weather proofed motor with stainless steel shaft
- Hydraulically efficient internal volute
- Drain plugs for winterisation
- Pump Body – UV stabilised glass filled thermoplastic
- Integral support base for ease of mounting
- Available in 4.0hp, 5.5hp & 7.0hp

Warranty information

3 Years Wet End
2 Years Motor, Hair and Lint Pot Lid, O-ring, Basket, Impeller and Diffuser
1 Year Mechanical seal and Capacitor

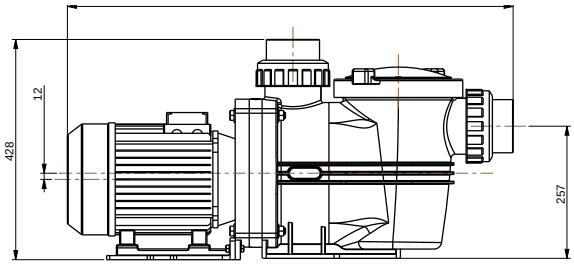

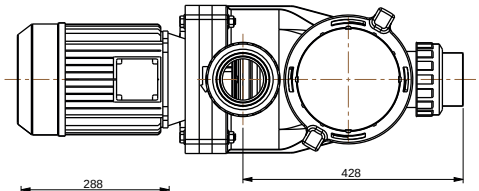

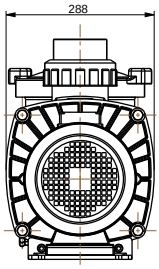

MOTOR KW	PUMP LENGTH 'L'
3.0	846
4.4	867
5.5	929

Specifications

Part Number	Model	Input Power kW	Input Power HP	Amps/ Phase	Weight (kg)	Total Length	Motor Frame	Phase	Voltage (V)	Motor Input Power (kW)	Cycle	RPM	Motor IP Rating	Pump IP Rating
2404400333	Hydrostar 400 MK4 IE3 Pump	2.975	4.0	5.8	41	846	100	3	380-415	3.444	50Hz	2890	55	X5
2404500333	Hydrostar 550 MK4 IE3 Pump	4.264	5.7	8.1	50	867	112	3	380-415	4.977	50Hz	2930	55	X5
2404700333	Hydrostar 700 MK4 IE3 Pump	5.398	7.2	10.3	54	929	112	3	380-415	6.166	50Hz	2917	55	X5

Hydrostar Plus Pumps

Waterco Hydrostar Plus

DISCOUNT CODE/ PRODUCT CODE		DESCRIPTION	PRICE
F	2460750EUM	Waterco Hydrostar Plus Pump 5.5kW / 7.5HP	£ POA
F	2461000EUM	Waterco Hydrostar Plus Pump 7.5kW / 10HP	£ POA
F	2461250EUM	Waterco Hydrostar Plus Pump 9.5kW/12.5HP	£ POA
F	2461500EUM	Waterco Hydrostar Plus Pump 11kW / 15HP	£ POA

WATERCO
water, the liquid of life

Hydrostar Plus Pump

Hydrostar Plus Pumps incorporate the latest technology in design and construction to produce a high performance self-priming pump. Constructed from an injection moulded glass reinforced thermoplastic that possesses superior mechanical and chemical resistance compared to steel. This pump is purpose built for aquatic facilities, water parks and large commercial swimming pools. Its pump body is manufactured utilising state of the art engineering plastic moulding for extra strength. It's seamless one-piece consists of no welds or seams or special tank linings which can corrode or electrolyse.

Features

- UV stabilised glass filled polypropylene housing
- Clear polycarbonate strainer lid for quick inspection
- Lid lock ring with ergonomic handles – simple removal & replacement of the lid without the use of additional tools
- 16 litre moulded polypropylene strainer basket
- Heavy duty IP55 weather proofed motor with 431 stainless steel shaft
- Enclosed glass filled Noryl impeller for long lasting reliability
- Available in 7.5hp, 10.0hp, 12.5hp and 15hp
- 6in flange suction ports
- 4in flange discharge ports
- Drain plug

Warranty information

3 Years Wet End
2 Years Motor, Hair and Lint Pot Lid, O-ring, Basket, Impeller and Diffuser
1 Year Mechanical seal and Capacitor

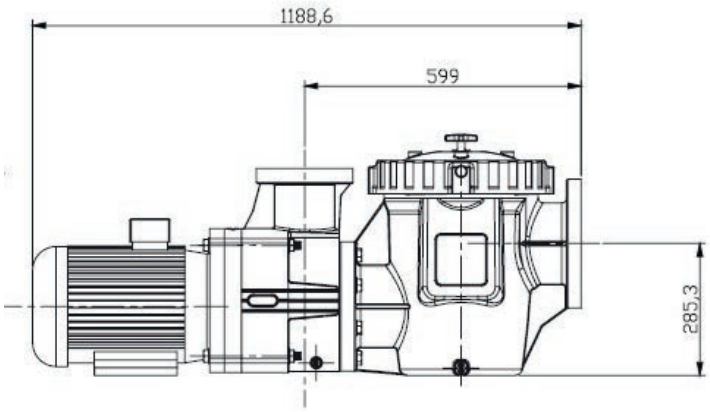

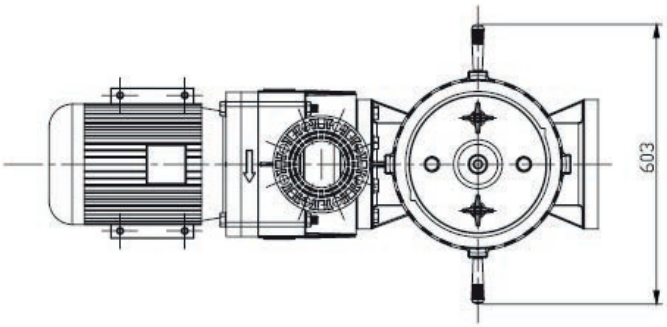

Specifications

Models	Nom. HP	kW	Pmax (kW)	Qmax (m^3/hr)	Amps/Phase	Total Length	Motor Length
5.5kW/7.5HP	8.3	6.2	8.5	122.40	10.15	1188	132
7.5kW/10HP	11.4	8.5	6.2	152.40	14.35	1188	132
9.5kW/12.5HP	14.0	10.5	9.9	164.64	17.6	1218	132
11kW/15HP	15.0	11.4	11.44	164.40	20.3	1218	132

Phase	Volts	Cycle	RPM
3	380 - 415	50	2940

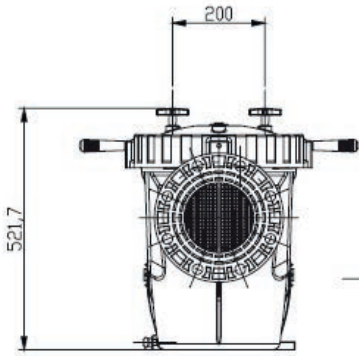

Hydrostorm Pumps

Waterco Hydrostorm

DISCOUNT CODE/ PRODUCT CODE		DESCRIPTION	PRICE
F	244100PNR-M	Waterco Hydrostorm 100 0.870kW 19.7m3/hr	£ POA
F	244150PNR-M	Waterco Hydrostorm 150 1.310kW 24.7m3/hr	£ POA
F	244200PNR-M	Waterco Hydrostorm 200 1.920kW 25.9m3/hr	£ POA
F	244300PNR-M	Waterco Hydrostorm 300 2.150kW 36.3m3/hr	£ POA
F	2441003EUM	Waterco Hydrostorm 3-ph 100 0.860kW 19.7m3/hr	£ POA
F	2441503EUM	Waterco Hydrostorm 3-ph 150 1.282kW 24.1m3/hr	£ POA
F	2442003EUM	Waterco Hydrostorm 3-ph 200 1.490kW 26.3m3/hr	£ POA
F	2443003EUM	Waterco Hydrostorm 3-ph 300 2.152kW 36.3m3hr	£ POA

WATERCO
water, the liquid of life

NEW FOR 2024

Hydrostorm Pump

The Hydrostorm is designed to have all the extra power you need to cope with modern day swimming pool designs.

Situated between the pump wet end & the pump motor, a mechanical seal forms a seal around the motor shaft to prevent water from travelling along the motor's shaft. The mechanical seal is the wearing part of any pool pump. A mechanical seal may leak water if the pump is ever run dry or simply be worn out. The "Motor Protection Bracket" adds a 60.5mm separation between the pump's wet end and its motor. It is designed to protect the pump motor by draining any leaks from a worn mechanical seal.

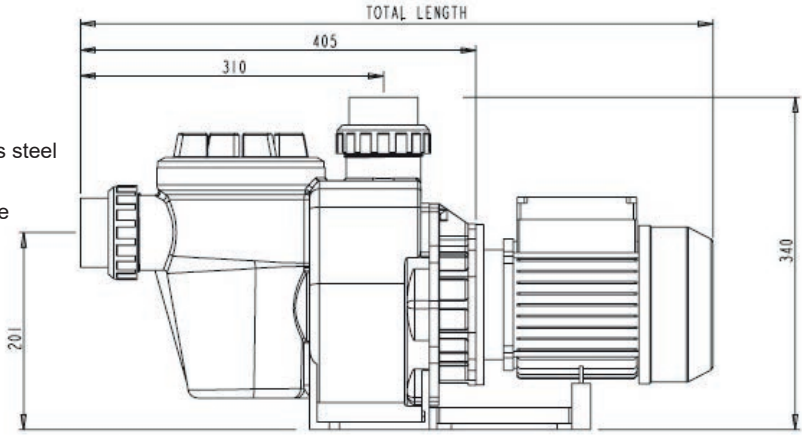

Features

- Clear basket lid
- Quick connect barrel unions for UPVC pipe
- High grade stainless steel mechanical seal with 316 stainless steel spring assembly
- High performance motor • IP55 rating • Motor shaft 431 grade stainless steel • Fan cooled • Thermal overload protection
- Stable support base
- Hydraulically efficient impeller and diffuser design
- Strong single piece glass filled thermoplastic pump body
- Drain plugs
- Extra-large strainer basket – captures debris and protects the impeller
- Motor protection bracket protects the motor from a leaking mechanical seal

Warranty information

3 Years Wet End
2 Years Motor, Hair and Lint Pot Lid, O-ring, Basket, Impeller and Diffuser
1 Year Mechanical seal and Capacitor

Specifications

Models	HP	Pmax (kW)	Amps	Phase	Total Length	Motor Frame	Flow Rate Qmax.
Hydrostorm 100	1.00	0.870	3.8	1	622	71	19.7m³/hr
Hydrostorm 100	1.00	0.860	2.1	3	618	71	19.7m³/hr
Hydrostorm 150	1.50	1.310	5.4	1	642	80	24.7m³/hr
Hydrostorm 150	1.50	1.382	2.4	3	647	80	24.1m³/hr
Hydrostorm 200	2.00	1.92	6.1	1	642	80	25.9m³/hr
Hydrostorm 200	2.00	1.49	3.2	3	647	80	26.3m³/hr
Hydrostorm 300	3.00	2.150	10.0	1	682	80	36.3m³/hr
Hydrostorm 300	3.00	2.152	4.2	3	691	80	36.3m³/hr

Phase	Volts	Cycle	RPM
1	220 - 240	50	2860
3	380 - 415	50	2860

Hydrostorm Plus Pumps

Waterco Hydrostorm Plus

DISCOUNT CODE/ PRODUCT CODE		DESCRIPTION	PRICE
F	2405100PNR-M	Waterco Hydrostorm Plus 100 0.910kW 19.8m3/hr	£ POA
F	24051503E3EUM	Waterco Hydrostorm Plus 150 - 2in connections 1.300kW 24.0m3/hr	£ POA
F	2405150PNR-M	Waterco Hydrostorm Plus 150 1.380kW 25.2m3/hr	£ POA
F	24052003E3EUM	Waterco Hydrostorm Plus 200 - 2in connections 1.511kW 26.4m3/hr	£ POA
F	2405200PNR-M	Waterco Hydrostorm Plus 200 1.420kW 25.9m3/hr	£ POA
F	24053003E3EUM	Waterco Hydrostorm Plus 300 - 2.5in connections 2.096kW 36.6m3/hr	£ POA
F	2405300PNR-M	Waterco Hydrostorm Plus 300 1.87kW 34.9m3/hr	£ POA
F	24054003E3EUM	Waterco Hydrostorm Plus 400 - 2.5in connections 2.738kW 21.0m3/hr	£ POA

WATERCO
water, the liquid of life

NEW FOR 2024

Hydrostorm Plus Pump

The Hydrostorm Plus has all the proven features of the Hydrostorm with the addition of an innovative lid & lock ring for easier maintenance and a larger strainer basket for increased capacity.

Situated between the pump wet end & the pump motor, a mechanical seal forms a seal around the motor shaft to prevent water from travelling along the motor's shaft. The mechanical seal is the wearing part of any pool pump. A mechanical seal may leak water if the pump is ever run dry or simply be worn out. The "Motor Protection Bracket" adds a 60.5mm separation between the pump's wet end and its motor. It is designed to protect the pump motor by draining any leaks from a worn mechanical seal.

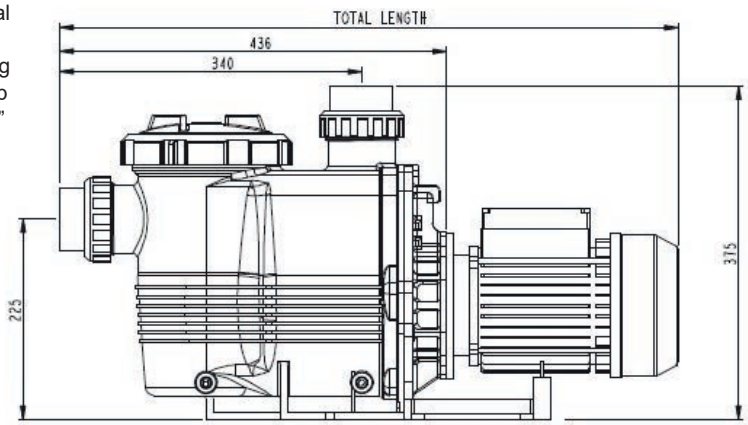

Features

- Clear basket lid
- Quick connect barrel unions for UPVC pipe
- High grade stainless steel mechanical seal with 316 stainless steel spring assembly
- High performance motor • IP55 rating • Motor shaft 431 grade stainless steel • Fan cooled • Thermal overload protection
- Stable support base
- Hydraulically efficient impeller and diffuser design
- Strong single piece glass filled thermoplastic pump body
- Drain plugs
- Extra-large strainer basket – captures debris and protects the impeller
- Motor protection bracket protects the motor from a leaking mechanical seal

Warranty information

3 Years Wet End
2 Years Motor, Hair and Lint Pot Lid, O-ring, Basket, Impeller and Diffuser
1 Year Mechanical seal and Capacitor

Specifications

Models	HP	Pmax (kW)	Amps	Phase	Total Length	Motor Frame	Flow Rate Qmax.
Hydrostorm Plus 100	1.00	0.910	4.0	1	652	71	19.8m³/hr
Hydrostorm Plus 150	1.50	1.380	5.7	1	672	80	25.2m³/hr
Hydrostorm Plus 150	1.50	1.30	2.4	3	677	80	24.0m³/hr
Hydrostorm Plus 200	2.00	1.402	6.1	1	672	80	25.9m³/hr
Hydrostorm Plus 200	2.00	1.511	2.4	3	677	80	26.4m³/hr
Hydrostorm Plus 300	3.00	2.007	8.8	1	729	80	34.9m³/hr
Hydrostorm Plus 300	3.00	2.096	4.3	3	738	90	36.3m³/hr
Hydrostorm Plus 400	4.00	2.738	5.5	3	757	100	41.0m³/hr

Phase	Volts	Cycle	RPM
1	220 - 240	50	2860
3	380 - 415	50	2860

NMP Self-Priming Centrifugal Pumps

Calpeda NMP

DISCOUNT CODE/ PRODUCT CODE		DESCRIPTION	PRICE
F2	NMP50/12F/B	Calpeda Self Priming Pump 2.2kw, 3hp	£ POA
F2	NMP50/12D/A	Calpeda Self Priming Pump 3kw, 4hp	£ POA
F2	NMP65/12E	Calpeda Self Priming Pump 4kw, 5.5hp	£ POA
F2	NMP65/12C	Calpeda Self Priming Pump 5.5kw, 7.5hp	£ POA
F2	NMP65/12A	Calpeda Self Priming Pump 7.5kw, 10hp	£ POA

Calpeda B-NMP

DISCOUNT CODE/ PRODUCT CODE		DESCRIPTION	PRICE
F2	BNMP50/12F/B	Calpeda Self Priming Pump 2.2kw, 3hp Bronze	£ POA
F2	BNMP50/12D/A	Calpeda Self Priming Pump 3kw, 4hp Bronze	£ POA
F2	BNMP65/12E	Calpeda Self Priming Pump 4kw, 5.5hp Bronze	£ POA
F2	BNMP65/12C	Calpeda Self Priming Pump 5.5kw, 7.5hp Bronze	£ POA
F2	BNMP65/12A	Calpeda Self Priming Pump 7.5kw, 10hp Bronze	£ POA

NMP

Calpeda NMP Self-Priming Centrifugal Pumps

with built-in strainer

Flexible

The option to choose between cast iron and bronze materials for the hydraulic parts in contact with the pumped liquid allows NMP series pumps to be selected for use with different types of liquids.

Stainless steel filter

A large capacity Stainless steel filter is fitted which is easy to remove for inspection and cleaning.

Exclusive design

An innovative, patented guard prevents contact with rotating parts, proving protection to the end user whilst allowing for inspection of the mechanical seal.

Reliable

The bearing and shaft are designed to ensure the reduction of the stress, providing high reliability under all operating conditions.

Construction

Close-coupled self-priming centrifugal pumps with built-in strainer. Inner basket with O 3 mm holes.

NMP: version with pump casing and lantern bracket in cast iron, with cataphoresis coating.

B-NMP: version with pump casing and lanter bracket in bronze (the pumps are supplied fully painted).

Applications

For water circulation in swimming pool filtration systems.

For clean or slightly dirty water with solids in suspension.

Operating conditions

Liquid temperature up to 60° C.

Ambient temperature up to 40° C.

Total suction lift up to 7 m.

Maximum permissible working pressure up to 6 bar.

Continuous duty.

Motor

2-pole induction motor, 50 Hz (n ≈ 2900 rpm).

NMP: three-phase 230/400 V ± 10% up to 3 kW; 400/690 V ± 10% from 4 to 7,5 kW;

NMPM: single-phase 230 V ± 10%, with thermal protector. Insulation class F. Protection IP X4.

IE3 efficiency class for three-phase motors (IE2 up to 0,65 kW).

Constructed in accordance with: EN 60034-1; EN 60034-30-1. EN 60335-1, EN 60335-2-41.

Special features upon request

- Other voltages.
- Frequency 60 Hz (as per 60 Hz data sheet).
- Protection IP 55.
- Special mechanical seal
- Higher liquid or ambient temperatures.

Warranty information

1 Year

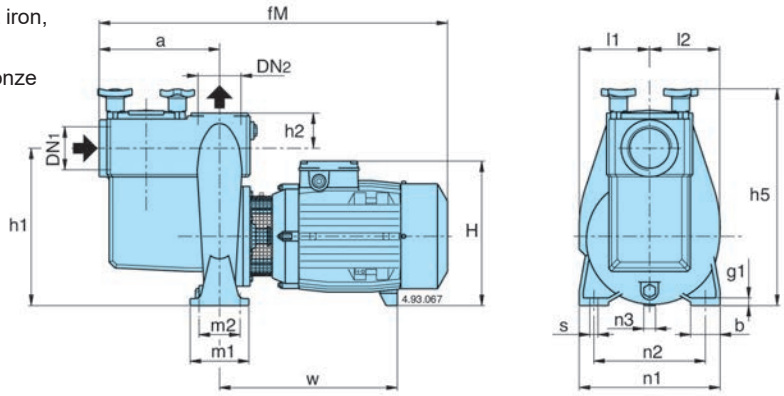

Dimensions and Weights

TYPE	DN1	DN2	mm																
	ISO	228	af	Mh	1h	2H		h5	m1	m2	n1	n2	n3	bs		l1	l2	wg	1
(B)**NMP 50/12F/B** (B)**NMP 50/12D/A**	G2½	G2½	205	580 602	2626	0	240 250	3601	00	70	240	190	37 20	50	14	1201	17	274 298	12
(B)**NMP 65/12E** (B)**NMP 65/12A-C**	G3	G3	320	724 750	3608	0	298 320	4701	25	95	280	212	60 49	651	4	157	159	303 284	15

TYPE	NMP kg	B-NMP kg
(B)**NMP 50/12G/A**	38,5	40
(B)**NMP 50/12F/B**	41,5	44,5
(B)**NMP 50/12D/A**	50,5	54,5
(B)**NMP 65/12E**	76	86,5
(B)**NMP 65/12C**	89	99
(B)**NMP 65/12A**	94,5	104,5

Inverter Drives for Plantroom Mounting

Invertek Optidrive

DISCOUNT CODE/ PRODUCT CODE		DESCRIPTION	PRICE
K	INVT001	Invertek Optidrive 0.75kW IP66 400V	£ POA
K	INVT002	Invertek Optidrive 1.5kW IP66 400V	£ POA
K	INVT003	Invertek Optidrive 2.2kW IP66 400V	£ POA
K	INVT004	Invertek Optidrive 4.0kW IP66 400V	£ POA
K	INVT005	Invertek Optidrive 5.5kW IP66 400V	£ POA
K	INVT006	Invertek Optidrive 7.5kW IP66 400V	£ POA
K	INVT007	Invertek Optidrive 11kW IP66 400V	£ POA
K	INVT008	Invertek Optidrive 0.37kW IP66 1 to 3 Phase	£ POA
K	INVT009	Invertek Optidrive 0.75kW IP66 1 to 3 Phase	£ POA
K	INVT010	Invertek Optidrive 1.5kW IP66 1 to 3 Phase	£ POA
K	INVT011	Invertek Optidrive 2.2kW IP66 1 to 3 Phase	£ POA
K	INVT012	Invertek Optidrive 4.0kW IP66 1 to 3 Phase	£ POA
K	INVT013	Invertek Optidrive 0.37kW IP66 1 Phase	£ POA
K	INVT014	Invertek Optidrive 0.75kW IP66 1 Phase	£ POA
K	INVT015	Invertek Optidrive 1.1kW IP66 1 Phase	£ POA

Outdoor rated enclosed drives also suitable for direct machine mounting, dust tight and ready for washdown duty.

Features

- Outdoor rated tough polycarbonate enclosure
- Sizes 2-4 up to 7.5 kW/10 HP
- Dust tight and washdown ready
- Conformally coated PCBAs as standard

Invertek Inverter Drives for Plantroom Mounting

Built with tough polycarbonate plastics specifically designed to withstand degradation by ultra-violet (UV), greases, oils and acids. Also robust enough not to become brittle at -20°C.

The Inverter Installs directly onto your processing equipment giving protection from dust and contaminants. Flat front to terminal cover with mounting points for switches and an internal PCB. With a sealed ABS enclosure and corrosion resistant heatsink, the Optidrive P2 IP66 is ideal for high-pressure washdown applications.

Warranty

2 Years

IP66 for Plantroom Mounting 400V Three Phase

FLC (A)	Plastica Code	HP	Image Reference
2.2	INVT001	Up to but not including 1hp	Size 1 IP66
4.1	INVT002	Up to but not including 2hp	Size 1 IP66
5.8	INVT003	Up to but not including 3hp	Size 2 IP66
9.5	INVT004	Up to but not including 5.5hp	Size 2 IP66
14	INVT005	Up to but not including 7.5hp	Size 3 IP66
18	INVT006	Up to but not including 10hp	Size 3 IP66
24	INVT007	Up to but not including 15hp	Size 3 IP66

Invertek Drives.com

Member of Sumitomo Drive Technologies

NEW FOR 2024

SIZE 1 IP66 NS
(SIZE 3 IP66 NS & SIZE 2 IP66 NS available)

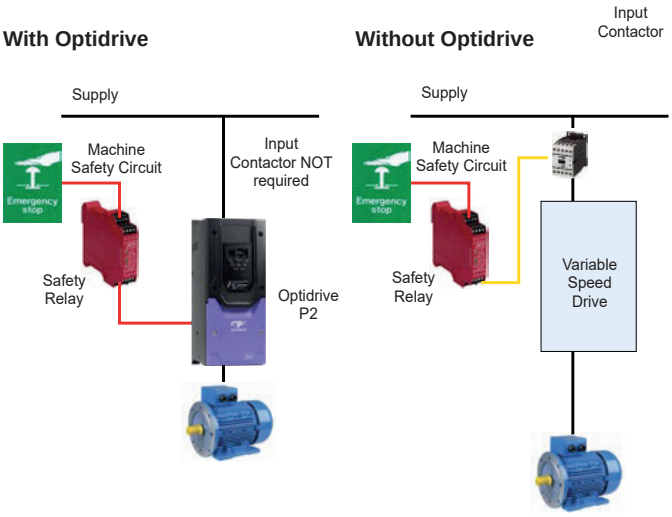

IP66 for Plantroom Mounting 230V Three Phase

FLC (A)	Plastica Code	HP	Image Reference
2.3	INVT008	Up to but not including 0.5hp	Size 1 IP66
4.3	INVT009	Up to but not including 1hp	Size 1 IP66
7	INVT010	Up to but not including 2hp	Size 1 IP66
10.5	INVT011	Up to but not including 3hp	Size 2 IP66
15.3	INVT012	Up to but not including 3hp	Size 3 IP66

IP66 for Plantroom Mounting 230V Single Phase/OUTPUT

FLC (A)	Plastica Code	HP	Image Reference
4.3	INVT013	Up to but not including 1hp	Size 1 IP66
7	INVT014	Up to but not including 2hp	Size 1 IP66
10.5	INVT015	Up to but not including 3hp	Size 2 IP66

Inverter Drives for Enclosure Mounting

Invertek Optidrive

DISCOUNT CODE/ PRODUCT CODE		DESCRIPTION	PRICE
K	INVT30	Invertek Optidrive 0.75kW IP20 400V	£ POA
K	INVT31	Invertek Optidrive 1.5kW IP20 400V	£ POA
K	INVT32	Invertek Optidrive 2.2kW IP20 400V	£ POA
K	INVT33	Invertek Optidrive 4.0kW IP20 400V	£ POA
K	INVT34	Invertek Optidrive 5.5kW IP20 400V	£ POA
K	INVT35	Invertek Optidrive 7.5kW IP20 400V	£ POA
K	INVT36	Invertek Optidrive 11kW IP20 400V	£ POA
K	INVT37	Invertek Optidrive 0.37kW IP20 1 to 3 Phase	£ POA
K	INVT38	Invertek Optidrive 0.75kW IP20 1 to 3 Phase	£ POA
K	INVT39	Invertek Optidrive 1.5kW IP20 1 to 3 Phase	£ POA
K	INVT40	Invertek Optidrive 2.2kW IP20 1 to 3 Phase	£ POA
K	INVT41	Invertek Optidrive 4.0kW IP20 1 to 3 Phase	£ POA
K	INVT42	Invertek Optidrive 0.37kW IP20 1 Phase	£ POA
K	INVT43	Invertek Optidrive 0.75kW IP20 1 Phase	£ POA
K	INVT44	Invertek Optidrive 1.1kW IP20 1 Phase	£ POA

Compact, robust and reliable general purpose drive for panel mounting.

Features

- Compact, robust enclosures for panel/cabinet mounting
- Sizes 2-4, 6A, 6B & 8 cover power ranges up to 250 kW/400 HP
- Operates up to 50°C
- Keyhole mounts for fast installation
- Maintenance Interval Timer and Service Indication

Invertek Inverter Drives for Enclosure Mounting

Optidrive E3 provides precise motor control and energy savings using the factory settings. Simply power up and the drive can immediately deliver energy savings.

14 basic parameters allow simple adjustment for your application if required, with up to 50 parameters available in total for a highly flexible performance.

Warranty

2 Years

Invertek Drives.com

Member of Sumitomo Drive Technologies

NEW FOR 2024

SIZE 1 IP20

SIZE 2 IP20

SIZE 3 IP20

IP20 for Enclosure Mounting 400V Three Phase

FLC (A)	Plastica Code	HP	Image Reference
2.2	INVT30	Up to but not including 1hp	Size 1 IP20
4.1	INVT31	Up to but not including 2hp	Size 1 IP20
5.8	INVT32	Up to but not including 3hp	Size 2 IP20
9.5	INVT33	Up to but not including 5.5hp	Size 2 IP20
14	INVT34	Up to but not including 7.5hp	Size 3 IP20
18	INVT35	Up to but not including 10hp	Size 3 IP20
24	INVT36	Up to but not including 15hp	Size 3 IP20

IP20 for Enclosure Mounting 230V Single to Three Phase

FLC (A)	Plastica Code	HP	Image Reference
2.3	INVT37	Up to but not including 0.5hp	Size 1 IP20
4.3	INVT38	Up to but not including 1hp	Size 1 IP20
7	INVT39	Up to but not including 2hp	Size 1 IP20
10.5	INVT40	Up to but not including 3hp	Size 2 IP20
15.3	INVT41	Up to but not including 3hp	Size 3 IP20

IP20 for Enclosure Mounting 230V Single Phase Input/OUTPUT

FLC (A)	Plastica Code	HP	Image Reference
4.3	INVT42	Up to but not including 1hp	Size 1 IP20
7	INVT43	Up to but not including 2hp	Size 1 IP20
10.5	INVT44	Up to but not including 3hp	Size 2 IP20

Sediment Prefilter

Waterco MultiCyclone

DISCOUNT CODE/ PRODUCT CODE		DESCRIPTION	PRICE
F	200393	Waterco MultiCyclone Filter 70XL Commercial	£ POA

WATERCO
water, the liquid of life

How it works

Incoming water is guided by a diverter plate so that it enters multiple hydro cyclones tangentially, generating a strong centrifugal effect. This spins the sediment out to the hydro cyclone's wall and then spirals it down to the sediment chamber, while the cleansed water spirals upwards.

The MultiCyclone pre-filters up to 80 per cent of the filter's incoming dirt load prior to the main filter. This reduces the load on the filter, thus reducing the frequency of filter maintenance by up to 80 per cent and saving backwash water. The MultiCyclone intercepts more and more sediment, the flow rate remains unchanged, improving pool water circulation.

The accumulation of sediment can be visibly monitored through the MultiCyclone 70XL's clear sight glass. The MultiCyclone 70 XL commercial is cleaned by simply opening the purge valve.

Features

- The MultiCyclone 70XL commercial is the first of the MultiCyclone suite of products designed specifically for both new and existing commercial installations
- Incoming water is guided by a diverter plate so that it enters 70 hydro cyclones that spin the sediment out to the hydro cyclone's wall. It then spirals it down to the sediment chamber, while the cleansed water spirals upwards and out
- It's cleaned by simply opening the purge valve. There is no filter media to clean or replace and no moving parts that cause wear and tear
- 4in/100mm Inlet and outlet ports
- It's designed to handle more than three times the amount of water per minute of the domestic MultiCyclone, and can handle up to 90 cubic meters per hour
- Clear sight glass enables the accumulation of sediment to be visibly monitored

Warranty information

10 Years

MultiCyclone 70XL Head Loss Curve

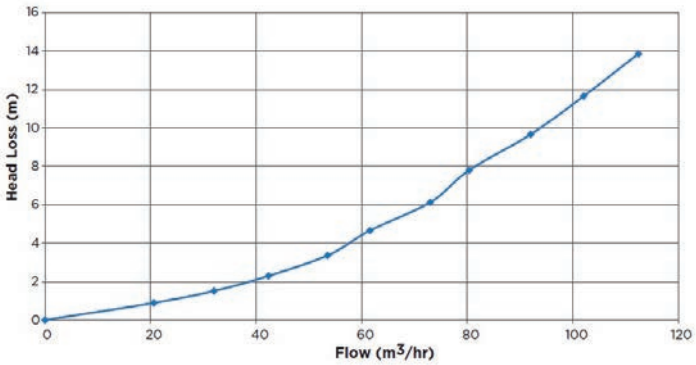

Specifications

Model	Connection Ports	Minimum Flow	Maximum Flow	Maximum Pressure
MultiCyclone 70XL Commercial	4in/110mm	36m³/hr	90m³/hr	3.5 BAR 350 kPa (50psi)

Side Mount Fibreglass Filters

Waterco SMD Filters

DISCOUNT CODE/ PRODUCT CODE		DESCRIPTION	PRICE
F	22501050903	Waterco Side Mount Bobbin Wound SMD1050 Sand Filter (3in/90mm port size) - 26m3/hr	£ POA
F	22501200903	Waterco Side Mount Bobbin Wound SMD1200 Sand Filter (3in/90mm port size) - 34m3/hr	£ POA
F	22501400903	Waterco Side Mount Bobbin Wound SMD1400 Sand Filter (3in/90mm port size) - 46m3/hr	£ POA
F	22501600903	Waterco Side Mount Bobbin Wound SMD1600 Sand Filter (3in/90mm port size) - 60m3/hr	£ POA
F	225016001103	Waterco Side Mount Bobbin Wound SMD1600 Sand Filter (4in/110mm port size) - 60m3/hr	£ POA
F	225018001103	Waterco Side Mount Bobbin Wound SMD1800 Sand Filter (4in/110mm port size) - 76m3/hr	£ POA
F	225020001103	Waterco Side Mount Bobbin Wound SMD2000 Sand Filter (4in/110mm port size) - 94m3/hr	£ POA

WATERCO
water, the liquid of life

Waterco SMD Range

Micron Side Mount Bobbin Wound Sand Filters Including Sight Glass – 2.5 bar pressure MPV not Included.

Features

- Fibreglass wound tank, UV and Corrosion Resistant Hydraulically balanced laterals to maximise water flow and filtration
- Optional six position Multiport valve with sight glass and quick connect half unions available upon request
- Available in filter areas of 0.87m² to 3.14m²
- Pressure rated at 2.5 Bar (36 psi)
- Maximum working temperature of 50°C (122°F)
- Sight glass Included
- 4 Bar (58 psi), 6 Bar (87psi) and up to 8 Bar (116 psi) available upon request

Warranty information

10 Years

Dimensions

Model	Connection Size		A	B	C	W	R	P	E	F	K	V	H	L	X	Y	Z	J	S	T
SMD1050	90	3.0"	918	1110	1930	510	363	548	1100	1210	220	1605	1470	176	1845	1482	1775	1045	1100	744
SMD1200	90	3.0"	977	1229	1935	510	363	548	1154	1264	150	1590	1400	176	1850	1536	1780	1045	1154	798
SMD1400	90	3.0"	1083	1442	1955	510	363	548	1204	1314	250	1615	1500	218	1870	1586	1800	1202	1204	848
SMD1600	90	3.0"	1184	1644	1994	510	363	548	1151	1261	220	1615	1500	218	1909	1533	1839	1202	1151	795
SMD1600*	110	4.0"	1765	1644	1994	943	474	629	757	419	180	1615	1430	218	1909	757	1839	1202	1189	757
SMD1800*	110	4.0"	1863	1839	1985	943	474	629	751	413	225	1710	1475	315	1900	751	1830	1755	1183	751
SMD2000*	110	4.0"	1964	2042	2063	943	474	629	758	420	300	1765	1550	245	1978	758	1908	1755	1190	758

Please note: these measurements are for valve orientation different to that shown in the adjacent diagram

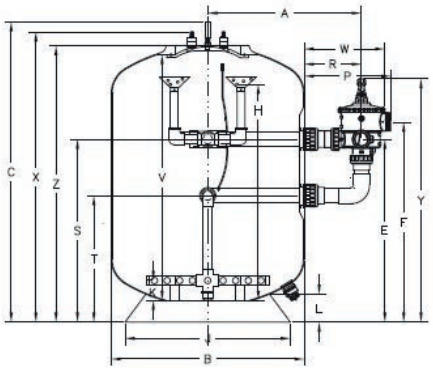

Specifications

Models	Connection Size		Filter Area	Bed Depth	Maximum Flow Rating 30³m/hr/m²	Maximum Flow Rating 40³m/hr/m²	Sand	EcoPure Media	Glass Pearls
	Inches	mm	mm	mm	m³/hr	m³/hr	kg	kg	kg
SMD1050	3.0	90	0.87	1000	26	35	1410	1159	1560
SMD1200	3.0	90	1.13	1000	34	45	1715	1414	1903
SMD1400	3.0	90	1.54	1000	46	62	2515	2067	2782
SMD1600	3.0	90	2.01	1000	60	80	3170	2605	3507
SMD1600	4.0	110	2.01	1000	60	80	3055	2515	3385
SMD1800	4.0	110	2.54	1000	76	102	4205	3456	4651
SMD2000	4.0	110	3.14	1000	94	126	5140	4225	5686

Additional sizing, sight glasses and service hatches available upon request.

Side Mount Deep Bed Flanged Union Filters

Waterco SMDD Filters

DISCOUNT CODE/ PRODUCT CODE		DESCRIPTION	PRICE
F	2249105480136L	Waterco Side Mount Bobbin Wound SMDD1050 Deep Bed Sand Filter (3in/90mm connections, 200mm service hatch) - 26m3/hr	£ POA
F	2249120043037L	Waterco Side Mount Bobbin Wound SMDD1200 Deep Bed Sand Filter (3in/90mm connections, 420x320mm service hatch) - 34m3/hr	£ POA
F	224914041025L	Waterco Side Mount Bobbin Wound SMDD1400 Deep Bed Sand Filter (4in/110mm connections, 420x320mm service hatch) - 46m3/hr	£ POA
F	224916041025L	Waterco Side Mount Bobbin Wound SMDD1600 Deep Bed Sand Filter (4in/110mm connections, 420x320mm service hatch) - 60m3/hr	£ POA
F	224918041525L	Waterco Side Mount Bobbin Wound SMDD1800 Deep Bed Sand Filter (6in/160mm connections, 420x320mm service hatch) - 76m3/hr	£ POA
F	224920041525L	Waterco Side Mount Bobbin Wound SMDD2000 Deep Bed Sand Filter (6in/160mm connections, 420x320mm service hatch) - 94m3/hr	£ POA
F	2240220041525L	Waterco Side Mount Bobbin Wound SMDD2200 Deep Bed Sand Filter (6in/160mm connections, 420x320mm service hatch) - 114m3/hr	£ POA
F	2249235015435	Waterco Side Mount Bobbin Wound SMDD2350 Deep Bed Sand Filter (6in/160mm connections, 420x320mm service hatch) - 130m3/hr	£ POA

WATERCO
water, the liquid of life

Waterco SMD Range

Micron Side Mount Deep Bed Sand Filters Including Sight Glass and Service Hatch – 4.0 bar Pressure.

Features

- Fibreglass wound tank, UV and Corrosion Resistant
- Hydraulically balanced laterals to maximise water flow and filtration
- Available in filter areas of 0.87m² to 4.34m²
- Pressure rated at 400 kPa (58 psi)
- Maximum working temperature of 50°C (122°F)
- Sight glass and lateral man hole included
- 600 kPa (87psi) and up to 800 kPa (116 psi) Available upon request
- Optional six position Multiport valve with sight glass and quick connect half unions

Warranty information

10 Years

Dimensions

Model	Flange Size		A	B	C	K	V	H	L	X	Z	J	S	T
SMDD1050	90 mm	3.0"	901	1077	2270	220	1950	1820	176	2185	2115	1045	1650	1294
SMDD1200	90 mm	3.0"	977	1229	2243	150	1900	1750	176	2158	2088	1045	1665	1309
SMDD1400	110 mm	4.0"	1664	1442	2313	200	1975	1800	218	2228	2158	1202	1330	898
SMDD1600	110 mm	4.0"	1765	1644	2285	200	1950	1800	218	2200	2130	1202	1421	989
SMDD1800	160 mm	6.0"	n/a	1839	2260	320	2010	1920	315	2175	2105	1755	1383	900
SMDD2000	160 mm	6.0"	n/a	2042	2398	320	2100	1920	245	2313	2243	1755	1310	827
SMDD2200	160 mm	6.0"	n/a	2245	2415	380	2090	1980	245	2330	2260	1755	1386	903
SMDD2350	160mm	6.0"	n/a	2390	2435	355	2118	1955	340	2330	2330	2037	1550	1017

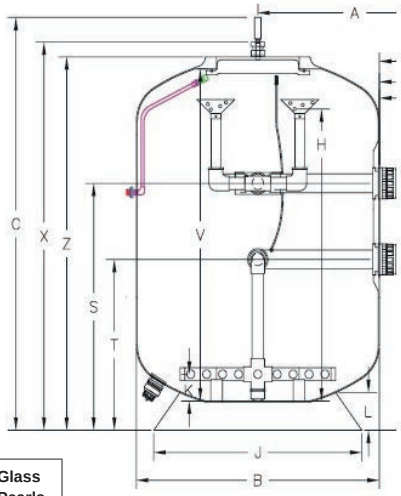

Specifications

Models	Connection Size		Filter Area	Bed Depth	Maximum Flow Rating 30³m/hr/m²	Maximum Flow Rating 40³m/hr/m²	Sand	EcoPure Media	Glass Pearls
	Inches	mm	mm	mm	m³/hr	m³/hr	kg	kg	kg
SMDD1050	3.0	90	0.87	1200	26	35	1665	1386	1842
SMDD1200	3.0	90	1.13	1200	34	45	2045	1681	2262
SMDD1400	4.0	110	1.54	1200	46	62	2840	2334	3142
SMDD1600	4.0	110	2.01	1200	60	80	3685	3029	4076
SMDD1800	6.0	160	2.54	1200	76	102	4975	4089	5503
SMDD2000	6.0	160	3.14	1200	94	126	6090	5005	6698
SMDD2200	6.0	160	3.80	1200	114	152	7625	6481	8435
SMDD2350	6.0	160	4.34	1200	130	173	8480	6970	9380

Nozzle Plate option available please contact us for more information

Easy Access Filters

Waterco Hydron Split Filter

DISCOUNT CODE/ PRODUCT CODE		DESCRIPTION	PRICE
F	223912008014	Waterco Hydron Split Filter 1200h 3in FL LCN - 34m3/hr	£ POA
F	223914008014	Waterco Hydron Split Filter 1400h 4in FL LCN - 46m3/hr	£ POA
F	223916008014	Waterco Hydron Split Filter 1600h 4in FL LCN - 60m3/hr	£ POA
F	223918008014	Waterco Hydron Split Filter 1800h 6in FL LCN - 76m3/hr	£ POA

WATERCO
water, the liquid of life

Waterco Hydron Split Filter

The Hydron Split Tank is manufactured from the highest grade of non-corrosive materials using the latest in gel coated fibreglass technology, in addition to the standard working pressure of 4 Bar.

Ideal for Retrofitting

They can be delivered in two parts and assembled on site in the plant room. The two halves seal perfectly, using double o-ring and held together by a flange using nuts and bolts. The filter is specifically designed to fit through existing standard size plant room doors.

Waterco's "Fish Bones" Laterals

Hydron Split-Tank Filters features Waterco's "fish bones" lateral, which improves water flow distribution through the filter bed. Conventional laterals are not suitable for larger size commercial filters. Dead legs exist between the laterals, and the water flow is not optimised through the filter bed. Conversely, Waterco's 'fish bones' lateral configuration eliminates any dead legs.

Features

- Durability: Fibreglass vessels have a mechanical and chemical resistance superior to steel, plus fibreglass does not rust or corrode and is able to withstand damage from many types of water treatment chemicals
- Lightweight Fibreglass tanks weigh only one third that of steel vessels, whilst maintaining the same level of strength
- Easy to Maintain: Once installed they are virtually free of maintenance or repairs
- Ideal for retrofitting: They can be delivered in two parts and assembled on site in the plant room. The two halves seal perfectly, using double o-ring and held together by a flange using bolt and nuts. The filter is specifically designed to fit through existing standard size plant room doors
- Hydron Split-Tank Filters features Waterco's "fish bones" lateral, which improves water flow distribution through the filter bed
- 4 bar rated
- Flanged tank port connections and quick connect half unions

Warranty information

10 Years

Dimensions

Model	A	B	C	D	E	F	G	H
SMDT 1200	1010	1095	700	749	2088	2245	1045	1521
SMDT 1400	1008	1165	700	814	2170	2330	1200	1737
SMDT 1600	995	1130	700	829	2130	2285	1200	1943
SMDT 1800	1105	1100	700	789	2188	2355	1760	2105

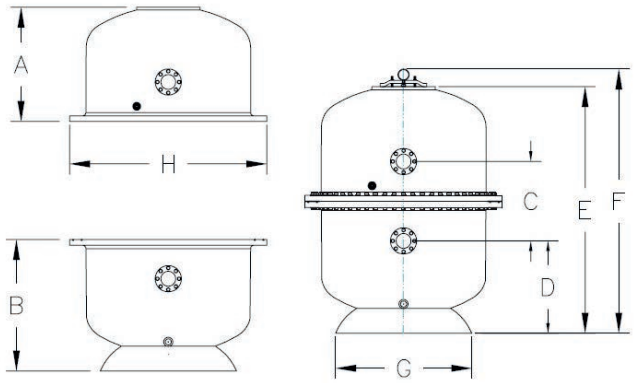

Specifications

Models	Valve Size		Bed Depth	Inner Dia.	Filter Area	Maximum Flow Rating 30³m/hr/m²	Maximum Flow Rating 36³m/hr/m²	Maximum Flow Rating 40³m/hr/m²	Maximum Flow Rating 50³m/hr/m²	Sand	EcoPure Media	Glass Pearls
	Inches	mm	mm	mm	m^2	m^3/hr	m^3/hr	m^3/hr	m^3/hr	kg	kg	kg
SMDT 1200	3.0	90	1000	1200	1.13	34	41	45	57	2045	1636	2262
SMDT 1400	4.0	110	1000	1400	1.54	46	55	62	77	2840	2272	3142
SMDT 1600	4.0	110	1000	1600	2.01	60	72	80	101	3685	2605	4076
SMDT 1800	6.0	160	1000	1800	2.54	76	92	102	127	4975	3890	5503

DBF Gelcoated Filters

Waterco Lacron Finaflow DBF Filters

DISCOUNT CODE/ PRODUCT CODE		DESCRIPTION	PRICE
F	222041624N	Waterco Lacron Finaflow DBF 24 2in (63mm) Connections - 15m3/hr	£ POA
F	222041630	Waterco Lacron Finaflow DBF 30 2in (63mm) Connections - 22.5m3/hr	£ POA
F	222041636	Waterco Lacron Finaflow DBF 36 3in (90mm) Connections - 33m3/hr	£ POA
F	222041642	Waterco Lacron Finaflow DBF 42 3in (90mm) Connections - 48.5m3/hr	£ POA

WATERCO
water, the liquid of life

NEW FOR 2024

DBF 24in Filter

DBF 24, 30, 36 & 42 Filter Features

- Clear inspection lid
- Manual air vent
- Filter base for stable floor mounting
- Hydraulically balanced laterals to maximise water flow
- Water drain and sand port
- Media service hatch, for rapid media removal
- UV and corrosion resistant
- Hard wearing glass reinforced polyester
- Media sight glasses are fitted for observing the condition of the media bed
- Inflow diffuser to equally distribute the flow across the filter bed

Warranty information

5 Years tank warranty
1 Year all other components

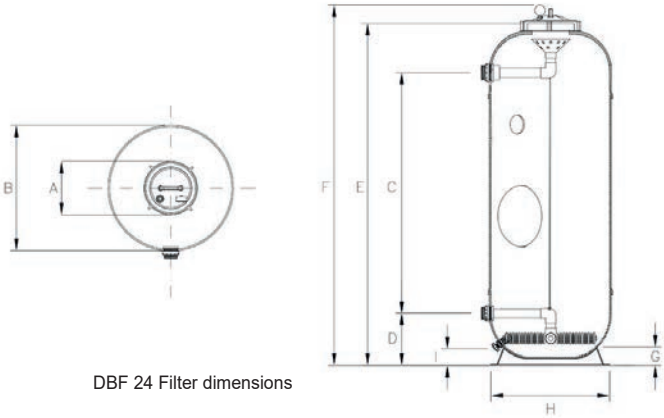

DBF 24 Filter dimensions

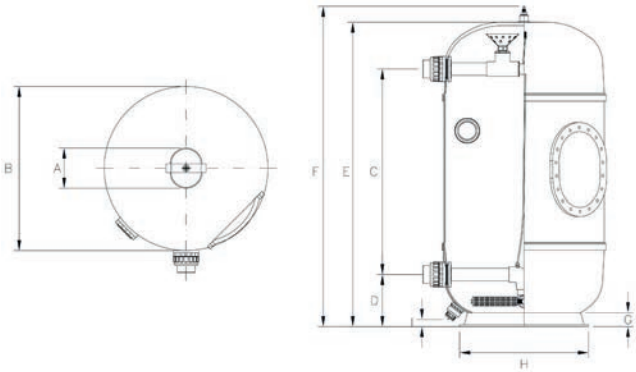

DBF 30/36 Filter dimensions

Dimensions

Model	TYPE	A	B	C	D	E	F	G	H	I
DBF-24	Collar Neck	267	625	1200	260	1706	1797	85	595	85
DBF-30	9" x 6" Lid	230	780	1350	290	1875	1967	110	740	110
DBF-36	9" x 6" Lid	230	945	1180	300	1750	1842	80	740	40
DBF-42	9" x 6" Lid	230	1105	1380	370	2065	2157	95	760	60

Specifications

Filter Model	Tank Diameter (mm)	Bed Depth (mm)	Filter Area (m^2)	Valve Size (in/mm)	Pea Gravel (kg)	Sand (kg)	EcoPure Glass (kg)	Glass Pearl (kg)	Max. Flow (m^2/h
DBF-24	610	1300	0.300	63/2	75	500	400	550	15
DBF-30	760	1525	0.450	63/2	100	775	625	852	22.5
DBF-36	915	1550	0.660	90/3	150	950	750	1045	33
DBF-42	1100	1580	0.970	90/3	150	1650	1400	1815	48.5

Horizontal Filters

Lacron Sureflow HZC Filter

DISCOUNT CODE/ PRODUCT CODE		DESCRIPTION	PRICE
F	222942423	Waterco Lacron Sureflow HZC 42 4in (110mm) Connections - 90m3/hr	£ POA

WATERCO
water, the liquid of life

NEW FOR 2024

The Lacron Sureflow HZC main tank structure is made from extremely hard-wearing glass reinforced polyester. The smooth high glass internal and external finish ensures free flow and easy cleaning.

HZC Filter Features

- Access manhole
- Inlet and outlet ports located for ease of plumbing
- Water drain
- Automatic air release
- Large stable support skirt
- Parallel underdrain for maximum performance
- Glass reinforced polyester
- UV and corrosion resistant

Warranty information

5 Years tank warranty
1 Year all other components

HZC 42in Filter

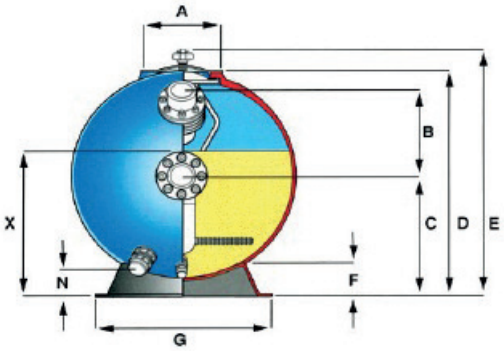

HZC 42 Filter dimensions

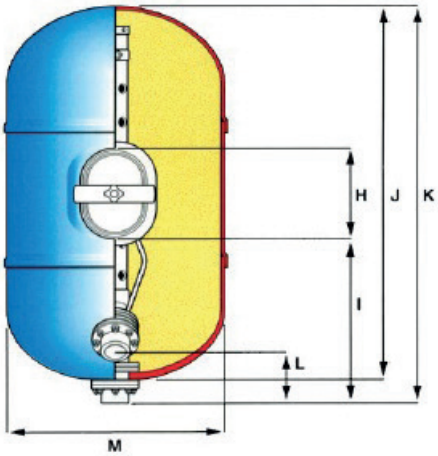

Dimensions

Model	A	B	C	D	E	F	G	H	I	J	K	L	M	N	X
HZC-42	330	400	660	1265	1335	190	815	430	800	1980	2030	310	1120	195	660

Specifications

Filter Model	Tank Diameter (mm)	Bed Depth (mm)	Filter Area (m^2)	Valve Size (in/mm)	Pea Gravel (kg)	Sand (kg)	EcoPure Glass (kg)	Glass Pearl (kg)	Max. Flow (m^2/h
HZC-42	1100	650	2.000	4/110	250	950	800	1045	90

Single Filter 5 Valve Battery Sets

Battery Set

DISCOUNT CODE/ PRODUCT CODE		DESCRIPTION	PRICE
F	PVCCSVBP0900	Plastica Commercial Single Filter 5 Valve Battery Set 3in	£ POA
F	PVCCSVBP1100	Plastica Commercial Single Filter 5 Valve Battery Set 4in	£ POA
F	PVCCSVBP1600	Plastica Commercial Single Filter 5 Valve Battery Set 6in	£ POA
F	PVCCSVBI0900	Plastica Commercial Single Filter 5 Valve Battery Set 90mm	£ POA
F	PVCCSVBI1100	Plastica Commercial Single Filter 5 Valve Battery Set 110mm	£ POA
F	PVCCSVBI1600	Plastica Commercial Single Filter 5 Valve Battery Set 160mm	£ POA

These valve battery sets are available in the following metric or imperial sizes:

3in, 4in or 6in

90mm, 110mm or 160mm

Features

- PVC-U Tee's x 5
- PVC-U Elbow's x 2
- PVC- U Butterfly Valve Kits including Flanges and Bolt Sets x 5
- PVC-U Pipe 3 metres Class C or 10bar for metric x 2
- Uni-Strut 41 x 41 x 2.5, 1.5 metre lengths x 2
- Feet for Uni-Strut with EPDM Damping x 2
- M10 Slide Nuts and M10 Studs x 4
- M10 Green Rubber Lined Brackets x 4

PVC Clear Sight Glasses with Unions

Sight Glass

DISCOUNT CODE/ PRODUCT CODE		DESCRIPTION	PRICE
F	PVCSGU0900	Plastica PVC Clear Sight Glass with Unions 3in	£ POA
F	PVCSGU1100	Plastica PVC Clear Sight Glass with Unions 4in	£ POA
F	PVCSGU1600	Plastica PVC Clear Sight Glass with Unions 6in	£ POA
F	PVCSGUI0900	Plastica PVC Clear Sight Glass with Unions 90mm	£ POA
F	PVCSGUI1100	Plastica PVC Clear Sight Glass with Unions 110mm	£ POA
F	PVCSGUI1600	Plastica PVC Clear Sight Glass with Unions 160mm	£ POA

Features

- Made from PVC
- Clear sight for backwash viewing
- sizes 3-6in / 90 - 160mm

Multiport Valves for Commercial Filter

Waterco Multi-port Valves

DISCOUNT CODE/ PRODUCT CODE		DESCRIPTION	PRICE
F	2290905	Waterco 3in/90mm Side Mount MPV With Plumbing Kit (SMD Commercial Filter only)	£ POA
F	2291105	Waterco 4in/110mm Side Mount MPV With Plumbing Kit (SMD Commercial Filter only)	£ POA
K	121559	Waterco SMD 2in 63mm Pipework Kit SMD700 - 900	£ POA

WATERCO
water, the liquid of life

Constructed from heavy duty ABS and GFPP, Waterco Multiport valves are designed for high performance and working pressures.

Features

- Durable lever action handle
- High grade stainless steel components
- 6 way multiple valve positions
- Rated at 400 kPa

Dual Pressure Gauge Panel

Pressure Gauge Panel

DISCOUNT CODE/ PRODUCT CODE		DESCRIPTION	PRICE
F	621640	Waterco Dual Pressure Gauge Panel Complete	£ POA

WATERCO
water, the liquid of life

How it works

Waterco's Dual Pressure gauge panel extremely versatile pressure measurement and test instrument. It can simultaneously display the output of two pressure gauges, so that you can accurately monitor the filter's pressure drop.

Features

- Easy installation
- Fibreglass panel
- Precision measurement
- Liquid filled gauges that minimizes the effect of severe environments, protects the gauge internals and provides continuous lubrication in the mechanism
- Corrosion resistant stainless steel casing gauge

Technical Specification

Service: Liquids

Case & Ring (Pressure Gauges): Stainless steel

Pressure Limit: 0 -4.1 BAR (0 -60 PSI)

Process Connections: 1/4in BSPT

Accuracy: 2.5% full scale

Bourdon Tube: Phosphor bronze

Window: Polycarbonate

Dial: Galvalume white background with blue and black markings
Pointer: Galvalume black finish.

Bespoke Stainless Steel

- Custom stainless steel ladders and handrails to suit your site requirements
- Available in 304 grade as standard and 316 stainless steel for salt water pools
- 38mm and 43mm railing sizes available
- Bespoke pool access handrail specialist (disabled access)
- Bespoke ramp handrail specialist (disabled access)
- Bespoke Ladder specialist
- Grabrails
- Support rails
- Safety rails
- Extra reach rails
- Commercial or domestic installations available
- Cross Bracing and flanged fixing for superior strength
- Manufactured in-house

For a quote contact Customer Services on 01424 857802 or email quote@commercialpools.co.uk

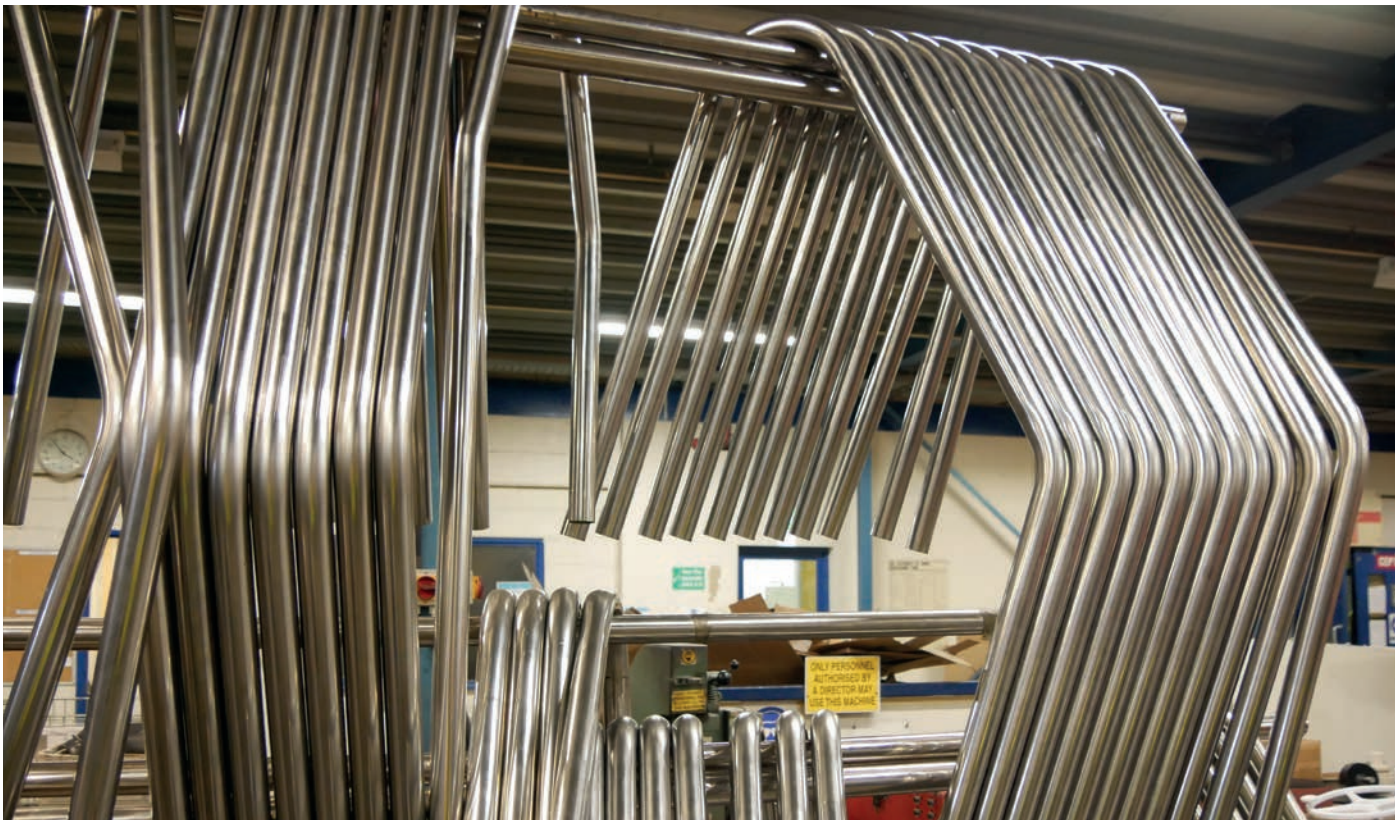

Supercover (5mm)

MANUFACTURED IN THE UK

COMMERCIAL

- 5mm polyolefine closed cell foam cover
- Tough woven top and bottom sheet for heat retention and strength
- Shaped and hemmed to your specification
- Weighs 0.42kg per sqm
- 29°C maximum temperature
- Hemming charge included in per square metre

ECO FRIENDLY

Warranty information
4 Years pro rata guarantee

Supercover 5mm

DISCOUNT CODE/ PRODUCT CODE		DESCRIPTION	PRICE
J	PSU100	Plastica 5mm Supercover Blue per Sqm	£ POA
J	PSU200	Plastica 5mm Supercover Grey per Sqm	£ POA

Finishing Options

Please refer to page 45 for all finishing options.

Notes: Covers 10 sqm and over will be charged at Bulky rate and are excluded from free delivery.

Help should be on hand to off-load larger covers upon delivery.

Hemming is available in blue, black or grey and will match the supercover colour. For example, a blue supercover will have a blue hem and a grey supercover will have a grey hem when ordered, unless otherwise stated.

Heat Retention Covers

Over 90% of a pool's heat is lost via the water surface; this can be considerably reduced by using a heat retention cover.

- Reduce humidity levels
- Reduce the need for heating and ventilation
- Installs on most pool types including free-form pools
- Covers should recoup their costs from energy saving within twelve months
- Covers over 12m should have reinforcing and a leading edge
- Covers are despatched in roll form
- Packaging adds approximately 150mm to cover width
- Perfect lay flat of this material cannot be guaranteed
- We work to +0.2% and -0.5% accuracy of any dimension

Premium (8mm)

ECO FRIENDLY

- 8mm foam centre with embossed underside
- Polyolefine woven fabric top laminate with UV stabilised coating
- Shaped and hemmed to your specification
- Suitable for hydrotherapy pools
- Weighs 0.53kg per sqm
- 29°C maximum temperature (39°C max for hydrotherapy pools)
- Hemming charge included in per square metre

Warranty information
4 Years pro rata guarantee (one year on hydrotherapy pools).

Premium 8mm

DISCOUNT CODE/	PRODUCT CODE	DESCRIPTION	PRICE
J	PPR100	Plastica 8mm Premium Cover per Sqm	£ POA

Hemming is available in blue, black or grey.
If hemming is ordered it will be blue as standard on the Premium cover, unless otherwise stated.

Finishing Options

Please refer to page 45 for all finishing options.

Notes: Covers over 3m length when packed will be charged a long length charge per cover and are excluded from free delivery.

Help should be on hand to off-load larger covers upon delivery.

RaeGuard™ Heat Retention Cover

COMMERCIAL

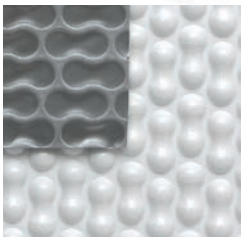

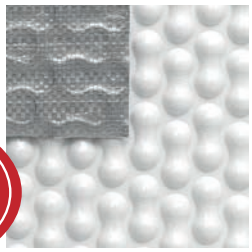

- 500 micron
- Retain heat and maintain pool temperature
- Reduce heating cost by up to 57%
- Pay back the cost of a cover within 1 year
- Works on both indoor and outdoor pools
- Eliminate evaporation by 98%
- Reduce debris contamination
- Save money and reduce the environmental impact of your pool
- With GeoBubble™ Technology
- Available with reinforcing weave

Warranty information
8 Years expected lifespan pro-rata warranty

RaeGuard GeoBubble

DISCOUNT CODE/ PRODUCT CODE		DESCRIPTION	PRICE
R	RAEG140	Plastica GeoBubble RaeGuard per Sqm	£ POA
R	RAES140	Plastica GeoBubble RaeGuard Weave per Sqm	£ POA

Finishing Options

Please refer to page 45 and 166 for all finishing options.

Notes: Welding on solar covers can lead to a slight waving.

Cover guarantee is void if pool temperature exceeds 29°C or SPATA standards for chemical and TDS levels are not met.

Covers 10sqm and over will be charged at Bulky rate and are excluded from free delivery.

Hemming is available in blue, black or grey.
If hemming is ordered it will be grey as standard on the RaeGuard cover, unless otherwise stated.

RaeGuard™ is a registered trademark and patented product of Plastipack Limited.

RaeGuard™
©Plastipack Ltd

Reflective
The specially selected pigments of RaeGuard™'s silver & white layers are designed to reflect and scatter radiative heat, and maximise reflection in the targeted mid-infrared region.

Heat Retention
The unique GeoBubble™ air cell provides a substantial barrier layer which works to prevent the transfer of thermal energy away from the surface of a pool.

Evaporation Control
When a pool is covered, instead of using energy to turn into water vapour, your pool water retains its thermal energy and stays warmer.

Reinforced Weave
Our new woven material range comes with all the benefits of GeoBubble™ with an improved strength, durability and longevity.
The new style weave is tighter, with a higher tensile strength, for a longer-lasting, tougher material for your pool.

The chart below shows the properties of the RaeGuard™ cover - the further the line is from the centre, the better the product is at that property

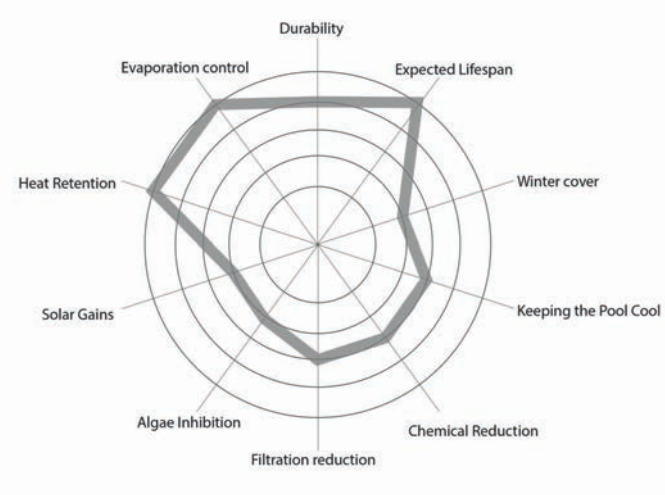

Spa Cover (12mm)

- For spas and hydrotherapy pools
- 12mm foam centre
- Laminated top and bottom with embossed clear protective layer
- Weighs 0.49kg per sqm
- 39°C maximum running temperature

ECO FRIENDLY

Warranty information

1 Year limited guarantee due to higher water temperatures and chemicals.

Spa 12mm

DISCOUNT CODE/ PRODUCT CODE		DESCRIPTION	PRICE
J	PSP200	Plastica 12mm Spa Cover per sqm	£ POA

Not suitable for use with Reel Systems. Cannot be hemmed.

Notes: Covers over 3m length when packed will be charged a long length charge per cover and are excluded from free delivery.

Cover guarantee is void if pool temperature exceeds 29°C or SPATA standards for chemical and TDS levels are not met.

Help should be on hand to off-load larger covers upon delivery.

Commercial Leading Edge & Reinforcing

- Commercial reinforced leading edge
- Helps operation of heat retention covers
- Saves wear and tear
- Blue or grey tarpaulin sleeving
- Heat welded and fitted to cover
- Recommended for all covers over 12m long
- Includes all tow ropes and reinforced reel end
- Laid flat during transportation to avoid creasing

Warranty information

2 Years

Leading Edge & Reinforcing

DISCOUNT CODE/	PRODUCT CODE	DESCRIPTION	PRICE
J2	PFA100	Plastica Commercial Foam Filled Leading Edge and Reinforcing per metre - Blue	£ POA
J2	PFA200	Plastica Commercial Leading Edge per metre - Blue	£ POA
J2	PFA150	Plastica Commercial Foam Filled Leading Edge per metre - Blue	£ POA
J2	PFA250	Plastica Commercial Leading Edge and Reinforcing per metre - Blue	£ POA
J2	PFA701	Plastica Commercial Leading Edge and Reinforcing per metre - Grey	£ POA
J2	PFA700	Plastica Commercial Foam Filled Leading Edge and Reinforcing - Grey	£ POA
J2	PFA750	Plastica Commercial Foam Filled Leading Edge per metre - Grey	£ POA
J2	PFA275	Plastica Commercial Reinforcing per metre - Blue	£ POA
J2	PFA775	Plastica Commercial Reinforcing per metre - Grey	£ POA
J2	PFA702	Plastica Commercial Leading Edge per metre - Grey	£ POA
J2	PFA301	DIY Reinforcing per metre	£ POA

Note: Above prices include fitting to new covers at time of manufacture.
DIY Reinforcing to strengthen reel end of cover where the straps connect.
This item has been upgraded for increased stability and strength.

Fixings

DISCOUNT CODE/	PRODUCT CODE	DESCRIPTION	PRICE
K	SHAK001	6mm Forged D Shackle 316 Stainless Steel	£ POA
K	DSH001	D shackle for commercial leading edge	£ POA
K	HOOK001	Hook carbine M7 x 70mm 316 Stainless Steel	£ POA
K	RIN020	Ring 50mm s/s	£ POA

Cord & Straps

DISCOUNT CODE/	PRODUCT CODE	DESCRIPTION	PRICE
K	COR255	10mm Blue Poly Cord in 25m Rolls	£ POA
K	COR253	5mm Blue Poly Cord in 25m Rolls	£ POA
K	COR251	8mm Heavy Duty Poly Cord in 25m Rolls	£ POA
K	WEB025	Blue Webbing 25m Roll	£ POA
J	TAR310	Commercial Tarp Strap for Motorised Reel 150mm wide Per LM - Blue	£ POA
J	TAR410	Commercial Tarp Strap for Motorised Reel 150mm wide Per LM - Grey	£ POA

Light Commercial Leading Edge

- Can be attached at time of manufacture
- Lightweight
- Cuts down on transport costs
- Can be despatched separately
- Attached on site
- 1.5m tubes and fittings sent as separate package
- Tough PVC coated netting
- Sleeve is self draining and corrosion resistant

Warranty information

4 Years

Light Commercial Pre-Fitted Leading Edge

DISCOUNT CODE/	PRODUCT CODE	DESCRIPTION	PRICE
J2	PFA400	Plastica 7.5m Fitted Light Commercial Leading Edge *	£ POA
J2	PFA500	Plastica 10.5m Fitted Light Commercial Leading Edge **	£ POA

* for pool sizes up to 8m wide (20m long) ** for pool sizes 8.01m to 11m wide (30m long)

Light Commercial DIY Leading Edge

DISCOUNT CODE/	PRODUCT CODE	DESCRIPTION	PRICE
J2	PFA501	Plastica 10.5m DIY Light Commercial Leading Edge *	£ POA
J2	PFA401	Plastica 7.5m DIY Light Commercial Leading Edge **	£ POA

Commercial Fixed Manual System

COMMERCIAL

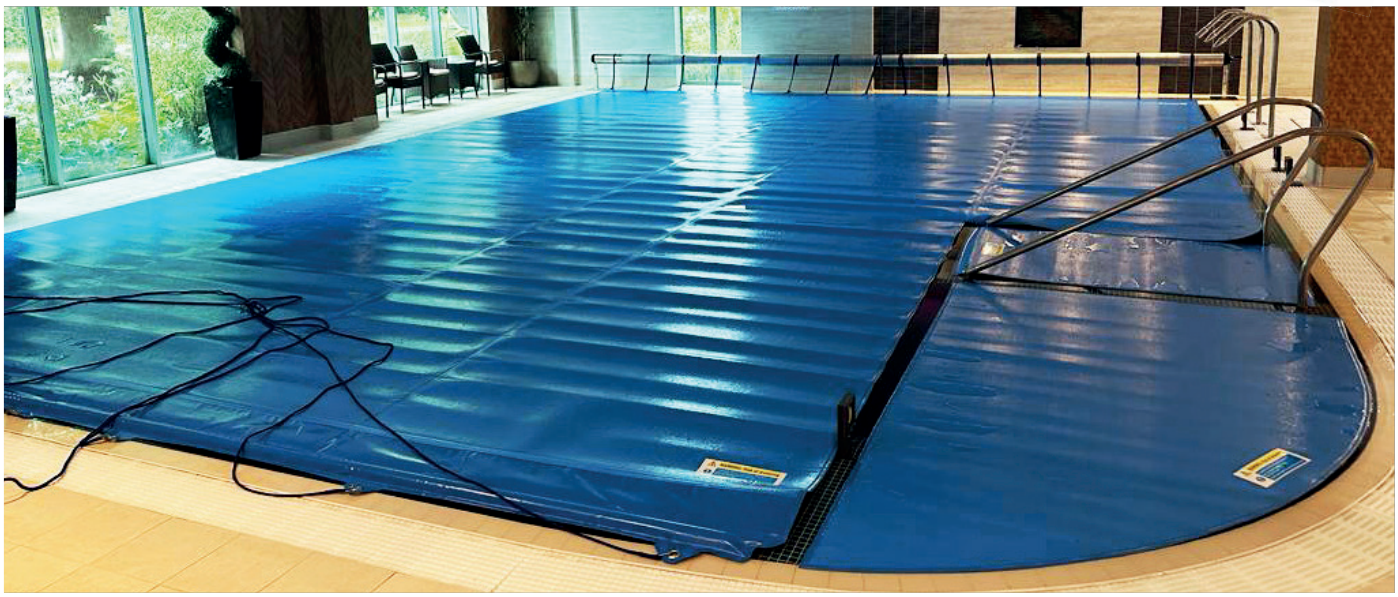

- Suitable for most smaller commercial pools
- Nylon end bosses and anodised tube
- Optional reduction gearbox
- Highly polished stainless steel end stands as standard
- White powder coating available on request

Fixed Manual Tube Packs

DISCOUNT CODE/ PRODUCT CODE		DESCRIPTION	PRICE
J	PCR012	Plastica 3.66m (12ft) Commercial Reel Tube Complete	£ POA
J	PCR014	Plastica 4.27m (14ft) Commercial Reel Tube Complete	£ POA
J	PCR016	Plastica 4.88m (16ft) Commercial Reel Tube Complete	£ POA
J	PCR018	Plastica 5.49m (18ft) Commercial Reel Tube Complete	£ POA
J	PCR020	Plastica 6.10m (20ft) Commercial Reel Tube Complete	£ POA
J	PCR022	Plastica 6.71m (22ft) Commercial Reel Tube Complete	£ POA
J	PCR024	Plastica 7.32m (24ft) Commercial Reel Tube Complete	£ POA
J	PCR026	Plastica 7.92m (26ft) Commercial Reel Tube Complete	£ POA
J	PCR028	Plastica 8.53m (28ft) Commercial Reel Tube Complete	£ POA
J	PCR030	Plastica 9.14m (30ft) Commercial Reel Tube Complete	£ POA
J	PCR032	Plastica 9.75m (32ft) Commercial Reel Tube Complete	£ POA

Fixed Manual End Stands

DISCOUNT CODE/ PRODUCT CODE		DESCRIPTION	PRICE
J	PCR002	Plastica Commercial Reel Base Plate End Stand	£ POA
J	PCR004	Plastica Commercial Reel Wallmount End Stand	£ POA
J	PCR006	Plastica Commercial Reel Sleeve Mount End Stand	£ POA
J	PCR120S	Plastica 0.3m 1ft Added Height To comm Reel System (Service)	£ POA

Note: Two End Stands required for every Reel System.

Fixed Reel with Reduction Gearbox

There is an additional cost of £1,115.00 per reel when a gearbox is required (covers over 140 sq.m.) Please add a "G" to the end of the reel code when ordering – i.e. PCR012G

- Approximate weight of each end stand including bearing is 10kg plus 2kg extra per 240mm run of tube
- Lightweight 127mm diameter aluminium tube supplied as standard

Warranty information

2 Years

Extension available through Service Agreement

Surcharges

	Length in metres						
	10	15	20	25	30	33	50
PCR012	0%	0%	0%	0%	0%	0%	U/G
PCR014	0%	0%	0%	0%	0%	0%	U/G
PCR016	0%	0%	0%	0%	0%	0%	U/G
PCR018	0%	0%	0%	0%	0%	0%	U/G
PCR020	0%	0%	0%	0%	0%	0%	U/G
PCR022	0%	0%	0%	0%	0%	U/G	U/G
PCR024	0%	0%	0%	0%	U/G	U/G	
PCR026	0%	0%	0%	U/G	U/G		
PCR028	0%	0%	U/G	U/G			
PCR030	0%	U/G	U/G				
PCR032	0%	U/G	U/G				

Note: **U/G** = If an upgrade to 150mm stainless steel tube is required, please contact Customer Services for a quote.

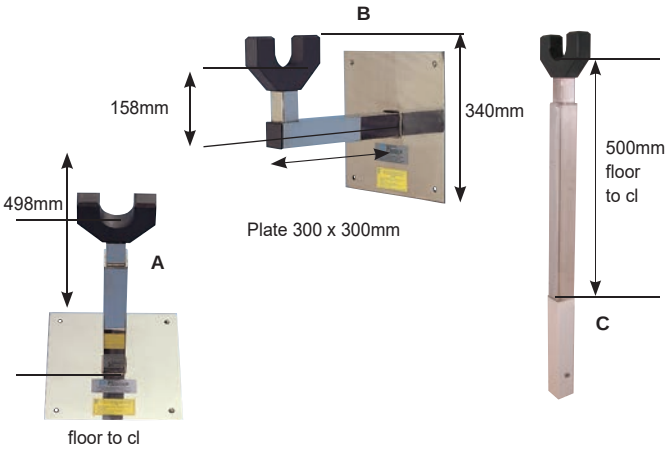

For a quote contact Customer Services on 01424 857802 or email: quotes@commercialpools.co.uk. Delivery for commercial products can be costly.
Always ask for a quotation before ordering. Reels should be at least 460mm larger than the cover. Help should be on hand to off-load larger covers upon delivery.
Note: Plastica reserve the right to charge for production drawings of bespoke reel systems.

Piggyback Mobile System

COMMERCIAL

H20 The Pool & Spa Company

- For pools up to 13.7m wide
- Ideal when two covers are necessary for pools over 9.14m wide
- Dual tubes take two covers supported by a pair of mobile end stands
- Detachable cover with quick-fit snap connectors

- Stainless steel frame with nylon end bosses
- 127mm diameter aluminium tube
- 152mm stainless steel braked castors

Warranty information

2 Years

Extension available through Service Agreement

Piggyback Mobile Reel

DISCOUNT CODE/ PRODUCT CODE		DESCRIPTION	PRICE
J	PPB012	Plastica 12ft Commercial Piggyback Mobile Reel System	£ POA
J	PPB014	Plastica 14ft Commercial Piggyback Mobile Reel System	£ POA
J	PPB016	Plastica 16ft Commercial Piggyback Mobile Reel System	£ POA
J	PPB018	Plastica 18ft Commercial Piggyback Mobile Reel System	£ POA
J	PPB020	Plastica 20ft Commercial Piggyback Mobile Reel System	£ POA
J	PPB022	Plastica 22ft Commercial Piggyback Mobile Reel System	£ POA
J	PPB024	Plastica 24ft Commercial Piggyback Mobile Reel System	£ POA

Quick Release Strap Kit

DISCOUNT CODE/ PRODUCT CODE		DESCRIPTION	PRICE
K	PPB20013	Plastica Piggyback Quick Release 5ft Strap Kit	£ POA
K	PPB20014	Plastica Piggyback Quick Release 7ft Strap Kit	£ POA

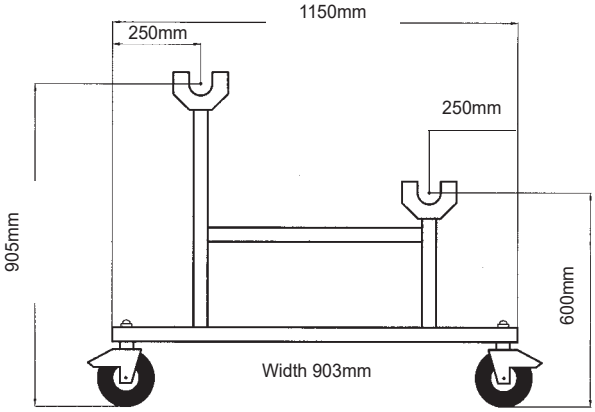

Piggyback with Reduction Gearbox

There is an additional cost of £2,230.00 per reel when gearboxes are required. Please add a "G" to the end of the reel code when ordering – i.e. PPB012G

Piggyback Mobile System size guide

PRODUCT CODE	SIZE
PPB012	3.66m (12") 50m
PPB014	4.27m (14") 50m
PPB016	4.88m (16") 50m
PPB018	5.49m (18") 50m
PPB020	6.10m (20") 50m
PPB022	6.71m (22") 34m
PPB024	7.32m (24") 25m

For a quote contact Customer Services on 01424 857802 or email: quotes@commercialpools.co.uk. Delivery for commercial products can be costly.
Always ask for a quotation before ordering. Reels should be at least 460mm larger than the cover. Help should be on hand to off-load larger covers upon delivery.
Note: Plastica reserve the right to charge for production drawings of bespoke reel systems.

Mobile Reel System

COMMERCIAL

- For smaller commercial pools
- Stainless steel frame with nylon end bosses
- 127mm diameter aluminium tube
- 127mm braked castors

Warranty information

2 Years

Extension available through Service Agreement

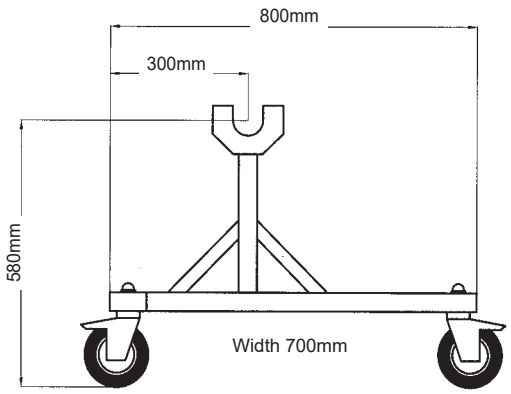

Mobile Reel System

DISCOUNT CODE/	PRODUCT CODE	DESCRIPTION	PRICE
J	PPB212	Plastica 12ft Commercial Mobile Reel System	£ POA
J	PPB214	Plastica 14ft Commercial Mobile Reel System	£ POA
J	PPB216	Plastica 16ft Commercial Mobile Reel System	£ POA
J	PPB218	Plastica 18ft Commercial Mobile Reel System	£ POA
J	PPB220	Plastica 20ft Commercial Mobile Reel System	£ POA
J	PPB222	Plastica 22ft Commercial Mobile Reel System	£ POA
J	PPB224	Plastica 24ft Commercial Mobile Reel System	£ POA
J	PPB226	Plastica 26ft Commercial Mobile Reel System	£ POA
J	PPB228	Plastica 28ft Commercial Mobile Reel System	£ POA
J	PPB230	Plastica 30ft Commercial Mobile Reel System	£ POA
J	PPB232	Plastica 32ft Commercial Mobile Reel System	£ POA

Note: If cover length exceeds maximum as indicated then 165mm aluminium tube is required. Phone Customer Services for a quote.

Reduction gearbox recommended for covers over 140sqm.

Mobile Reel with Reduction Gearbox

There is an additional cost of £1,115.00 per reel when a gearbox is required. Please add a “G” to the end of the reel code when ordering – ie. PPB212G

Mobile Reel System size guide

PRODUCT CODE	SIZE
PPB212	3.66m (12”) 50m
PPB214	4.27m (14”) 50m
PPB216	4.88m (16”) 50m
PPB218	5.49m (18”) 50m
PPB220	6.10m (20”) 50m
PPB222	6.71m (22”) 34m
PPB224	7.32m (24”) 25m
PPB226	7.92m (26”) 25m
PPB228	8.53m (28”) 17m
PPB230	9.14m (30”) 14m
PPB232	9.75m (32”) 10m

For a quote contact Customer Services on 01424 857802 or email quotes@commercialpools.co.uk

Delivery for commercial products can be costly. Always ask for a quotation before ordering.

Reels should be at least 460mm larger than the cover.

Help should be on hand to off-load larger covers upon delivery.

Note: Plastica reserve the right to charge for production drawings of bespoke reel systems.

Commercial Gearbox Converter Kit

NEW IMPROVED DESIGN

- Designed to fit 5in commercial tubes
- 3.5:1 reduction making it easier to wind the reel
- Comes with our detachable steel crank handle as standard
- Complete kit for easy DIY fitting
- Optional extra

Warranty information

2 Years

Commercial Gearbox

DISCOUNT CODE/ PRODUCT CODE		DESCRIPTION	PRICE
J	RGK008	Plastica Commercial Gearbox Converter Kit	£ POA

For a quote contact Customer Services on 01424 857802 or email quotes@commercialpools.co.uk

Delivery for commercial products can be costly. Always ask for a quotation before ordering.

Reels should be at least 460mm larger than the cover.

Help should be on hand to off-load larger covers upon delivery.

Note: Plastica reserve the right to charge for production drawings of bespoke reel systems.

Motorised Full Commercial Stanchion

COMMERCIAL

- Ultra quiet motors with soft start - soft stop mechanism
- 304mm diameter stainless steel tubing
- Maximum cover capacity of 600sqm
- 14m maximum tube length.
- Key switch and remote control operation
- Auto stop end of run settings

Smartphone compatible apps available on compatible motorised cover systems. Ask for details when quoting!

Warranty information

5 Years motor
5 Years on stanchion and axle
2 Years on motor controls
2 Years on fixings

For information on our Survey Charges, please visit our website:
www.commercialpools.co.uk
quotes@commercialpools.co.uk

For a quote contact Customer Services on 01424 857802 or email quotes@commercialpools.co.uk

Delivery for commercial products can be costly. Always ask for a quotation before ordering.

Reels should be at least 460mm larger than the cover.

Help should be on hand to off-load larger covers upon delivery.

Note: Plastica reserve the right to charge for production drawings of bespoke reel systems.

Motorised Light Commercial

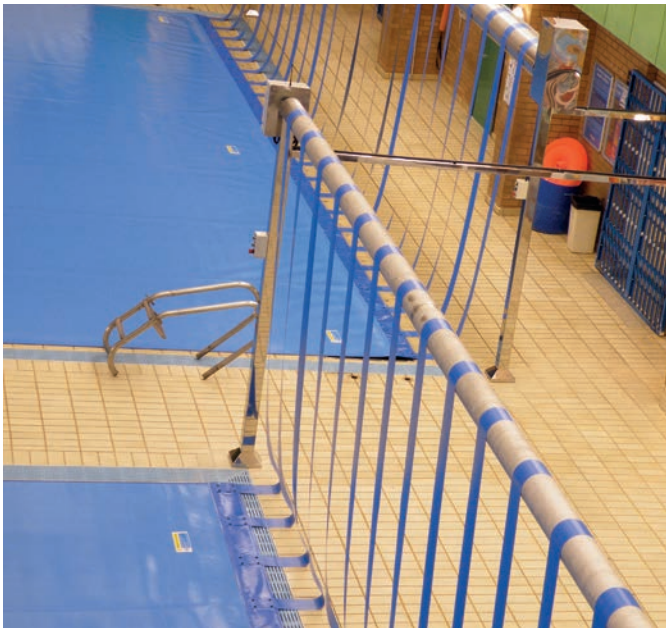

- Ideal for small commercial swimming pools
- Ultra quiet motors with soft start - soft stop mechanism
- Manufactured from stainless steel
- Maximum cover size 17sqm
- 9m maximum standard tube length
- 168mm tube diameter
- Key switch and remote control
- Auto stop end of run settings

For a quote contact Customer Services on 01424 857802 or email quote@commercialpools.co.uk

Warranty information

5 Years motor (external)
2 Years on motor (internal)

Smartphone compatible apps available on compatible motorised cover systems. Ask for details when quoting!

Wind Resistant Wires

- Recommended for Commercial outdoor Heat Retention Covers
- Helps protect from lifting in winds up to Gale Force 5 (30km/h)
- Stainless steel wire fitted inside hemming and fixed at pool ends
- Requires wires on lengths and widths, together with two of each end fitting kit

Notes: Wires can only be fitted at the time of manufacture.

Not guaranteed to make a pool cover windproof Covers should be stored on a reel system in winds over Gale Force 5 (30km/h)

Length fixing shown above

Wind Resistent Wires

DISCOUNT CODE/ PRODUCT CODE		DESCRIPTION	PRICE
J	WRW001	Plastica Wind wires per linear metre	£ POA
K	WRT001	Plastica Towing End Fitting Kit	£ POA
K	WRR001	Plastica Reel End Fitting Kit	£ POA

Towing End – Length Fixing

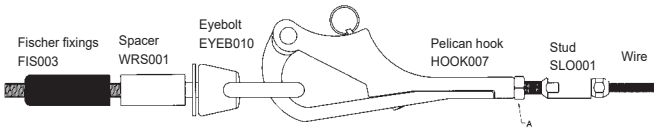

Reel End – Length Fixing

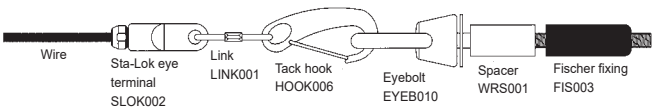

Towing End – Width Fixing

Reel End – Width Fixing

Lifesaving Equipment

Life Hook

DISCOUNT CODE/ PRODUCT CODE		DESCRIPTION	PRICE
J	PFR400	Plastica Life Hook	£ POA
D	PFR408	Plastica Aluminium Life Hook Pole 2.44m (8ft)	£ POA
D	PFR412	Plastica Aluminium Life Hook Pole 3.66m (12ft)	£ POA
J	PRP001	Plastica Reach Pole 1.52m	£ POA
K	PFR200	Plastica Heavy Duty 400mm Internal Diameter Lifebuoy	£ POA

Lifebelt – PFR200

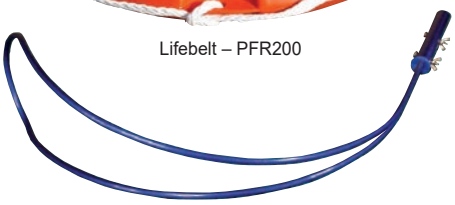

Life Hook – PFR400

1.52m Reach Pole PRP001

Poles

- Complock compression locking device
- Made of ribbed anodised aluminium
- Synthetic handle

Poles

DISCOUNT CODE/ PRODUCT CODE		DESCRIPTION	PRICE
D	PTP900	Plastica Commercial Telescopic Pole 3.6 to 7m (23ft)	£ POA
D	PTP950	Plastica Commercial Telescopic Pole 4.9 to 9.4m (30ft)	£ POA

Concrete & Commercial Vacuum Heads

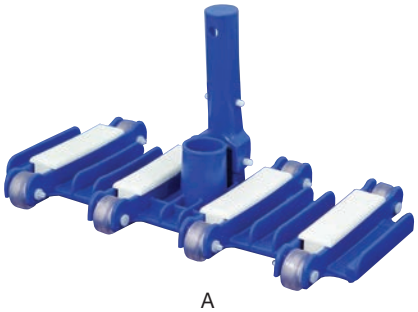

A

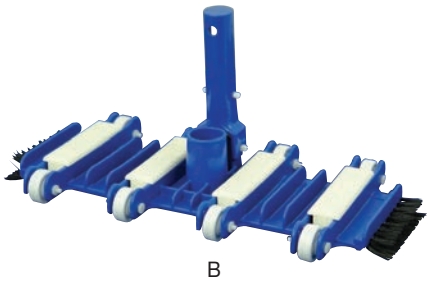

B

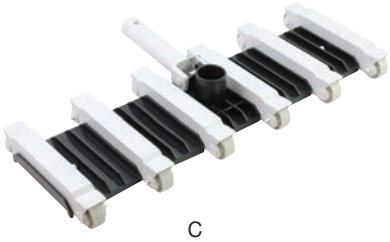

C

Commercial Vacuum Heads

DISCOUNT CODE/ PRODUCT CODE		DESCRIPTION	PRICE
M	MPM060	Flexible Concrete Vacuum Head Without Side Brushes 13in (330mm) (A)	£ POA
M	MPM104	Flexible Concrete Vacuum Head With Side Brushes 13in (330mm) (B)	£ POA
M	MPM111	Commercial Vacuum Head 19in (482mm) (C)	£ POA
K	CVH19	Deluxe Commercial Vacuum Head 19in (482mm) (D)	£ POA

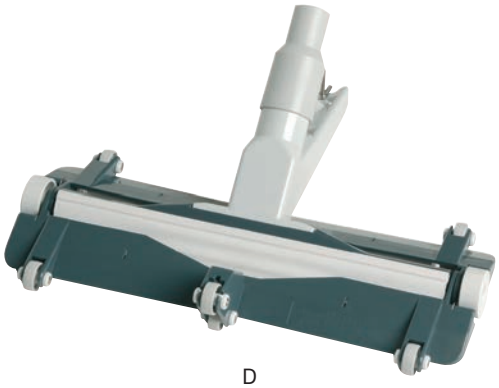

D

Commercial Water Treatment

This commercial weight range has been launched at SPATEX this year! Throughout the previous year we have been working hard to ensure that our product is fully compliant with UK BPR legislation and we are listed on the UK HSE website under GB Article 95.

Our range includes everything you need for a healthy water balance. It is available to order in 25kg units of full or half pallet bulk. If you want any information about this or any other products feel free to contact us.

- Anti-scale additive
- Stabiliser free
- 70% available chlorine
- Less pH correction required
- excellent water clarity
- suitable for hard or soft water

NEW FOR 2024

RPRO70 – RELAX Pro70
Calcium Hypochlorite Granules

RPRO75 – RELAX Pro70
Calcium Hypochlorite Pellets

Calcium Hypochlorite

DISCOUNT CODE/ PRODUCT CODE		DESCRIPTION	PRICE
Nett	RPRO70	Relax Pro 70 Calcium Hypochlorite Granules 25kg	£ POA
Nett	RPRO70P	Relax Pro 70 Calcium Hypochlorite Granules 25kg - Pallet of 22	£ POA
Nett	RPRO75	Relax Pro 70 Calcium Hypochlorite Pellets 25kg	£ POA
Nett	RPRO75P	Relax Pro 70 Calcium Hypochlorite Pellets 25kg - Pallet of 22	£ POA

Hydrochloric Acid & Hydrogen Peroxide

T10	RCH505	25 Litre Hydrochloric Acid 32%	£ POA
T10	PCHB9025	25 Litre Hydrogen Peroxide 12%	£ POA

Water Balance

Nett	RPRO71	Relax Pro Sodium Bisulphate pH Minus 25kg	£ POA
Nett	RPRO71P	Relax Pro Sodium Bisulphate pH Minus 25kg - Pallet of 18	£ POA
Nett	RPRO72	Relax Pro Sodium Carbonate pH Plus 25kg	£ POA
Nett	RPRO72P	Relax Pro Sodium Carbonate pH Plus 25kg - Pallet of 18	£ POA
Nett	RPRO73	Relax Pro Sodium Bi-Carbonate TA Plus¬†25kg	£ POA
Nett	RPRO73P	Relax Pro Sodium Bi-Carbonate TA Plus¬†25kg - Pallet of 18	£ POA
Nett	RPRO74	Relax Pro Calcium Hardness Plus 25kg	£ POA
Nett	RPRO74P	Relax Pro Calcium Hardness Plus 25kg - Pallet of 18	£ POA

Half and full pallet bulk buy prices available on all Hypro products - contact your Account Manager for details.

RPRO71 – RELAX Pro
Sodium Bisulphate (pH-)

RPRO72 – Relax Pro
Sodium Carbonate (pH+)

Bulk Bags

T10	PCH717	25kg Sodium Bisulphate Granules pH- - MOQ 5 Bags	£ POA
T10	PCH716	25kg Sodium Carbonate Granules pH+ - MOQ 5 Bags	£ POA
T10	PCH718	25kg Sodium Bi-Carbonate Granules Total Alkalinity Plus - MOQ 5 Bags	£ POA
T10	PCH715	25kg Calcium Chloride Flakes - MOQ 5 Bags	£ POA

RPRO73 – Relax Pro
Sodium Bicarbonate (TA+)

RPRO74 – Relax Pro
Calcium Chloride (Hardness+)

Flocculants

T10	PAC123	25 Litre Poly Aluminium Chloride	£ POA
T10	PCH460	25kg Aluminium Sulphate Kibbled	£ POA
T10	PCH512	25kg Aluminum Sulphate Granular	£ POA

Note: Multiple quantities can be added to fit onto one pallet. See page 6 for explanation.

Note: Sodium hypochlorite must be delivered on a pallet due to shipping regulations, therefore a minimum delivery charge of half a pallet will be incurred. Sodium hypochlorite is also excluded from free delivery.

Biocidal Product Regulations

Plastica are committed to the Biocidal Product Regulation and all of our raw materials are from approved sources. We are fully compliant with these regulations and will continue to be. As substances are approved and authorised we will ensure all our [brands/products/trade names] are fully registered. You may see small changes in the labels, but you can trust your supply chain is secure with Plastica.

Relax® Calcium Hypochlorite

- Granules
- Ideal for indoor pools, commercial and semi-commercial pools

Relax Calcium Hypochlorite

DISCOUNT CODE/	PRODUCT CODE	DESCRIPTION	PRICE
T4	RCH020	1kg Relax Pool Granular Shock Chlorine - Box of 6	£ POA
T4	RCH021	2kg Relax Pool Granular Shock Chlorine - Box of 6	£ POA
T4	RCH022	5kg Relax Pool Granular Shock Chlorine - Box of 4	£ POA
T4	RCH120	10kg Relax Pool Granular Shock Chlorine	£ POA
T4	RCH121	25kg Relax Pool Granular Shock Chlorine	£ POA

Relax® Liquid Shock

Relax Liquid Shock

DISCOUNT CODE/	PRODUCT CODE	DESCRIPTION	PRICE
T10	RCH127	10 Litre Relax Liquid Shock 14/15%	£ POA
T10	RCH129	20 Litre Relax Liquid Shock 14/15%	£ POA
T10	RCH128	20 Litre Relax Liquid Shock 14/15% - Pallet of 32	£ POA
T10	RCH123	25ltr Ultra Sodium Hypo 14%	£ POA
T10	RCH122	25ltr Ultra Sodium Hypo 14% - Pallet of 32	£ POA

RCH129 20L RCH127 10L

Note: Sodium hypochlorite must be delivered on a pallet due to shipping regulations, therefore a minimum delivery charge of half a pallet will be incurred. Sodium hypochlorite is also excluded from free delivery.

RCH123 25L

Commercial Water Treatment Test Kits & Accessories

COMMERCIAL

Lovibond Comparator Test Kit

DISCOUNT CODE/	PRODUCT CODE	DESCRIPTION	PRICE
T11	GTK595	Lovibond AF 126B Balanced Water Test Kit Bromine, pH, Alkalinity-m and Calcium Hardness	£ POA
T11	GTK585	Lovibond AF 129 Balanced Water Test Kit Chlorine, pH, Alkalinity-m, Calcium hardness	£ POA

Lovibond Test Kit Accessories

DISCOUNT CODE/	PRODUCT CODE	DESCRIPTION	PRICE
T11	GTK010	5 x 10ml Square Glass Test Tubes	£ POA
T11	GTK020	5 x 10ml Square Plastic Test Tubes	£ POA

GTK585

Photometers & Test Tablets

Lovibond Photometers

DISCOUNT CODE/	PRODUCT CODE	DESCRIPTION	PRICE
T11	GTK915	5 x Photometer Replacement Vials	£ POA
T11	278091	Lovibond MD 100 Photometer 6-In-1 Pool Control Test Kit - Chlorine, Bromine, pH, Cyanuric acid, Alkalinity-m, Calcium hardness, tablet reagents	£ POA
T11	2980902	Lovibond MD 110 Photometer 6-In-1 Pool Control Test Kit with Bluetooth - Chlorine, Bromine, pH, Cyanuric acid, Alkalinity-m, Calcium hardness, tablet reagents	£ POA
T11	214070	Lovibond PM 630 The Pool Manager: All pool parameters in one instrument with Bluetooth	£ POA
T11	GTK913	Photometer Water Sampler	£ POA
T11	GTK916	Pool Control 12-in-1 Photometer kit	£ POA
T11	GTK918	Pool Control 3-in-1 Photometer kit	£ POA
T11	GTK917	Pool Control 6-in-1 Photometer kit	£ POA

Lovibond Test Tablets

DISCOUNT CODE/	PRODUCT CODE	DESCRIPTION	PRICE
T11	GTK904	Lovibond Alkalinity M Tablets Scuba 2 - Box of 250	£ POA
T11	GTK903	Lovibond Photometer CalCheck Tablets - Box of 250	£ POA
T11	GTK902	Lovibond Photometer Ozone DPD No.4 Tablets - Box of 250	£ POA
T11	GTK610	Relax Calcium Hardness Tablets - Box of 250	£ POA
T11	GTK865	Relax Cyanuric Acid Test Tablets - Box of 250	£ POA
T11	GTK205	Relax DPD No 1 Comparator/Photometer Tablets - Box of 250	£ POA
T11	GTK210	Relax DPD No 3 Comparator/Photometer Tablets - Box of 250	£ POA
T11	GTK215	Relax Phenol Red Comparator Photometer Tablets - Box of 250	£ POA
T11	GTK905	Relax Phenol Red Tablets - Box of 250	£ POA
T11	GTK900	Relax Photometer Copper No.1 & 2 Tablets - Box of 250	£ POA
T11	GTK050	Relax Total Alkalinity Test Tablets - Box of 250	£ POA

278091 MD100

2980902 MD110 Bluetooth

214070 PM630

Lovibond TDS Meter

- Waterproof
- Simple to use
- Large display screen
- Multi-range TDS (total dissolved solids) with temperature display

Lovibond TDS Meter

DISCOUNT CODE/	PRODUCT CODE	DESCRIPTION	PRICE
T11	GTK701	Lovibond 11 TDS Pen Type TDS Meter	£ POA

COMMERCIAL

Plate Heat Exchangers

Elecro Plate Heat Exchangers

DISCOUNT CODE/	PRODUCT CODE	DESCRIPTION	PRICE
H	PHE100-TI	Elecro Plate Heat Exchanger (Titanium Plate) 0.624m2 102kW	£ POA
H	PHE140-TI	Elecro Plate Heat Exchanger (Titanium Plate) 0.816m2 140kW	£ POA
H	PHE180-TI	Elecro Plate Heat Exchanger (Titanium Plate) 1.104m2 178kW	£ POA
H	PHE240-TI	Elecro Plate Heat Exchanger (Titanium Plate) 1.584m2 242kW	£ POA
H	PHE290-TI	Elecro Plate Heat Exchanger (Titanium Plate) 1.776m2 287kW	£ POA
H	PHE370-TI	Elecro Plate Heat Exchanger (Titanium Plate) 2.448m2 370kW	£ POA
H	PHE410-TI	Elecro Plate Heat Exchanger (Titanium Plate) 2.64m2 414kW	£ POA
H	PHE450-TI	Elecro Plate Heat Exchanger (Titanium Plate) 2.873m2 446kW	£ POA
H	PHE500-TI	Elecro Plate Heat Exchanger (Titanium Plate) 3.887m2 504kW	£ POA
H	PHE550-TI	Elecro Plate Heat Exchanger (Titanium Plate) 4.225m2 546kW	£ POA
H	PHE610-TI	Elecro Plate Heat Exchanger (Titanium Plate) 4.563m2 609kW	£ POA
H	PHE670-TI	Elecro Plate Heat Exchanger (Titanium Plate) 5.239m2 672kW	£ POA
H	PHE730-TI	Elecro Plate Heat Exchanger (Titanium Plate) 5.577m2 735kW	£ POA
H	PHE780-TI	Elecro Plate Heat Exchanger (Titanium Plate) 5.915m2 777kW	£ POA
H	PHE820-TI	Elecro Plate Heat Exchanger (Titanium Plate) 5.253m2 819kW	£ POA

ELECRO ENGINEERING

Cost effective heat management solution. Whether it is for heating or cooling their efficient operation saves energy, reducing costs and minimising environmental impact.

- 19 models available, ranging from 30-kW to 819-kW
- Plate and gasket materials available to suit most fluid types
- Compact design gives maximum surface area to material volume without compromising mechanical robustness
- High overall heat transfer coefficient
- High performance with low hold-up volume
- Versatile, modular design
- Easy dismantling for rapid cleaning
- Short lead-time custom build service

Warranty information

2 Years

NEW FOR 2024

Elecro Titan Optima

DISCOUNT CODE/	PRODUCT CODE	DESCRIPTION	PRICE
H	CP-TS-18	Elecro Titan Optima 18kW 26A Three Phase Heater 40-54m3	£ POA
H	CP-TS-24	Elecro Titan Optima 24kW 34A Three Phase Heater 54-72m3	£ POA
H	CP-TS-30	Elecro Titan Optima 30kW 44A Three Phase Heater 72-90m3	£ POA
H	CP-TS-36	Elecro Titan Optima 36kW 53A Three Phase Heater 90-108m3	£ POA
H	CP-TS-45	Elecro Titan Optima 45kW 66A Three Phase Heater 108-135m3	£ POA
H	CP-TS-54	Elecro Titan Optima 54kW 79A Three Phase Heater 135-162m3	£ POA
H	CP-TS-60	Elecro Titan Optima 60kW 87A Three Phase Heater 162-180m3	£ POA
H	CP-TS-72	Elecro Titan Optima 72kW 105A Three Phase Heater 180-216m3	£ POA
H	CP-TS-96	Elecro Titan Optima 96kW 139A Three Phase Heater 216-288m3	£ POA
H	CP-TS-120	Elecro Titan Optima 120kW 174A Three Phase Heater 288-366m3	£ POA

Reliable accurate and efficient, the Titan Optima fully titanium heater is top of the range and comes with a touchscreen display. It is the ideal choice for a long-lasting heater for commercial pools.
The design makes it highly robust and durable.

- Various power options ranging from 18-kW to 120-kW
- Easy installation, fully equipped and pre-wired
- Robust, durable construction
- Ultra-reliable flow switch allows safe operation
- Supplied with temperature thermostat and overheating sensor
- Compact, durable design
- Touchscreen control with soft-start for power supply protection
- Titanium flow tubes and titanium heating elements
- Can be floor or vertically wall mounted
- Vortex, long life, stay clean heating element technology
- 100% efficiency throughout the product life
- Silent operation

Warranty information

2 Years

Imperial PVC Pipe & Fittings

Pipe - Imperial

DISCOUNT CODE/	PRODUCT CODE	DESCRIPTION	PRICE
P	PVCIPIP153050	0.5in PVC Pipe Grey 3m Length 15 Bar Rated	£ POA
P	PVCIPIP156050	0.5in PVC Pipe Grey 6m Length 15 Bar Rated	£ POA
P	PVCIPIP153075	0.75in PVC Pipe Grey 3m Length 15 Bar Rated	£ POA
P	PVCIPIP156075	0.75in PVC Pipe Grey 6m Length 15 Bar Rated	£ POA
P	PVCIPIP153100	1in PVC Pipe Grey 3m Length 15 Bar Rated	£ POA
P	PVCIPIP156100	1in PVC Pipe Grey 6m Length 15 Bar Rated	£ POA
P	PVCIPIP153125	1.25in PVC Pipe Grey 3m Length 15 Bar Rated	£ POA
P	PVCIPIP156125	1.25in PVC Pipe Grey 6m Length 15 Bar Rated	£ POA
P	PVCIPIP153150	1.5in PVC Pipe Grey 3m Length 15 Bar Rated	£ POA
P	PVCIPIP156150	1.5in PVC Pipe Grey 6m Length 15 Bar Rated	£ POA
P	PVCIPIP096200	2in PVC Pipe Grey 6m Length 9 Bar Rated	£ POA
P	PVCIPIP153200	2in PVC Pipe Grey 3m Length 15 Bar Rated	£ POA
P	PVCIPIP156200	2in PVC Pipe Grey 6m Length 15 Bar Rated	£ POA
P	PVCIPIP096300	3in PVC Pipe Grey 6m Length 9 Bar Rated	£ POA
P	PVCIPIP153300	3in PVC Pipe Grey 3m Length 15 Bar Rated	£ POA
P	PVCIPIP156300	3in PVC Pipe Grey 6m Length 15 Bar Rated	£ POA
P	PVCIPIP096400	4in PVC Pipe Grey 6m Length 9 Bar Rated	£ POA
P	PVCIPIP156400	4in PVC Pipe Grey 6m Length 15 Bar Rated	£ POA
P	PVCIPIP096500	5in PVC Pipe Grey 5m Length 9 Bar Rated	£ POA
P	PVCIPIP096600	6in PVC Pipe Grey 6m Length 9 Bar Rated	£ POA
P	PVCIPIP156600	6in PVC Pipe Grey 6m Length 15 Bar Rated	£ POA
P	PVCIPIP096800	8in PVC Pipe Grey 6m Length 9 Bar Rated	£ POA

90 Degree Bend - Imperial

P	PVCIBDP0050	0.5in Grey PVC 90 Bend P P 15 Bar	£ POA
P	PVCIBDP0075	0.75in Grey PVC 90 Bend P P 15 Bar	£ POA
P	PVCIBDP0100	1in Grey PVC 90 Bend P P 15 Bar	£ POA
P	PVCIBDP0125	1.25in Grey PVC 90 Bend P P 15 Bar	£ POA
P	PVCIBDP0150	1.5in Grey PVC 90 Bend P P 15 Bar	£ POA
P	PVCIBDP0200	2in Grey PVC 90 Bend P P 15 Bar	£ POA

End Caps - Imperial

P	PVCICAP0050	0.5in Grey PVC End Cap 15 Bar	£ POA
P	PVCICAP0075	0.75in Grey PVC End Cap 15 Bar	£ POA
P	PVCICAP0100	1in Grey PVC End Cap 15 Bar	£ POA
P	PVCICAP0125	1.25in Grey PVC End Cap 15 Bar	£ POA
P	PVCICAP0150	1.5in Grey PVC End Cap 15 Bar	£ POA
P	PVCICAP0200	2in Grey PVC End Cap 15 Bar	£ POA
P	PVCICAP0250	2.5in Grey PVC End Cap 15 Bar	£ POA
P	PVCICAP0300	3in Grey PVC End Cap 15 Bar	£ POA
P	PVCICAP0400	4in Grey PVC End Cap 15 Bar	£ POA
P	PVCICAP0500	5in Grey PVC End Cap 15 Bar	£ POA
P	PVCICAP0600	6in Grey PVC End Cap 9 Bar	£ POA
P	PVCICAP0800	8n Grey PVC End Cap 9 Bar	£ POA

Butterfly Valve Kit - Imperial

P	PVCIBVK0300	3in Grey PVC Butterfly Valve Kit	£ POA
P	PVCIBVK0400	4in Grey PVC Butterfly Valve Kit	£ POA
P	PVCIBVK0600	6in Grey PVC Butterfly Valve Kit	£ POA

45 Degree Elbows - Imperial

DISCOUNT CODE/	PRODUCT CODE	DESCRIPTION	PRICE
P	PVCI45E0050	0.5in Grey PVC 45 Elbow P P 15 Bar	£ POA
P	PVCI45E0075	0.75in Grey PVC 45 Elbow P P 15 Bar	£ POA
P	PVCI45E0100	1in Grey PVC 45 Elbow P P 15 Bar	£ POA
P	PVCI45E0125	1.25in Grey PVC 45 Elbow P P 15 Bar	£ POA
P	PVCI45E0150	1.5in Grey PVC 45 Elbow P P 15 Bar	£ POA
P	PVCI45E0200	2in Grey PVC 45 Elbow P P 15 Bar	£ POA
P	PVCI45E0250	2.5in Grey PVC 45 Elbow P P 15 Bar	£ POA
P	PVCI45E0300	3in Grey PVC 45 Elbow P P 15 Bar	£ POA
P	PVCI45E0400	4in Grey PVC 45 Elbow P P 15 Bar	£ POA
P	PVCI45E0500	5in Grey PVC 45 Elbow P P 15 Bar	£ POA
P	PVCI45E0600	6in Grey PVC 45 Elbow P P 9 Bar	£ POA
P	PVCI45E0800	8in Grey PVC 45 Elbow P P 9 Bar	£ POA

90 Degree Elbows - Imperial

P	PVCI90E0050	0.5in Grey PVC 90 Elbow P P 15 Bar	£ POA
P	PVCI90E0075	0.75in Grey PVC 90 Elbow P P 15 Bar	£ POA
P	PVCI90E0100	1in Grey PVC 90 Elbow P P 15 Bar	£ POA
P	PVCI90E0125	1.25in Grey PVC 90 Elbow P P 15 Bar	£ POA
P	PVCI90E0150	1.5in Grey PVC 90 Elbow P P 15 Bar	£ POA
P	PVCI90E0200	2in Grey PVC 90 Elbow P P 15 Bar	£ POA
P	PVCI90E0250	2.5in Grey PVC 90 Elbow P P 15 Bar	£ POA
P	PVCI90E0300	3in Grey PVC 90 Elbow P P 15 Bar	£ POA
P	PVCI90E0400	4in Grey PVC 90 Elbow P P 15 Bar	£ POA
P	PVCI90E0500	5in Grey PVC 90 Elbow P P 15 Bar	£ POA
P	PVCI90E0600	6in Grey PVC 90 Elbow P P 9 Bar	£ POA
P	PVCI90E0800	8in Grey PVC 90 Elbow P P 9 Bar	£ POA

Equal Tees - Imperial

P	PVCI90T0050	0.5in Grey PVC Tee Joint P P P 15 Bar	£ POA
P	PVCI90T0075	0.75in Grey PVC Tee Joint P P P 15 Bar	£ POA
P	PVCI90T0100	1in Grey PVC Tee Joint P P P 15 Bar	£ POA
P	PVCI90T0125	1.25in Grey PVC Tee Joint P P P 15 Bar	£ POA
P	PVCI90T0150	1.5in Grey PVC Tee Joint P P P 15 Bar	£ POA
P	PVCI90T0200	2in Grey PVC Tee Joint P P P 15 Bar	£ POA
P	PVCI90T0250	2.5in Grey PVC Tee Joint P P P 15 Bar	£ POA
P	PVCI90T0300	3in Grey PVC Tee Joint P P P 15 Bar	£ POA
P	PVCI90T0400	4in Grey PVC Tee Joint P P P 15 Bar	£ POA
P	PVCI90T0500	5in Grey PVC Tee Joint P P P 15 Bar	£ POA
P	PVCI90T0600	6in Grey PVC Tee Joint P P P 9 Bar	£ POA
P	PVCI90T0800	8in Grey PVC Tee Joint P P P 9 Bar	£ POA

Reducing Sockets - Imperial

P	PVCIRSK075050	0.75in x 0.5in Grey PVC Reducing Socket P P (15 bar)	£ POA
P	PVCIRSK100075	1in x 0.75in Grey PVC Reducing Socket P P (15 bar)	£ POA
P	PVCIRSK125100	1.25in x 1in Grey PVC Reducing Socket P P (15 bar)	£ POA
P	PVCIRSK150125	1.5in x 1.25in Grey PVC Reducing Socket P P (15 bar)	£ POA
P	PVCIRSK200150	2in x 1.5in Grey PVC Reducing Socket P P (15 bar)	£ POA

Imperial PVC Pipe & Fittings

Socket Adaptors - Imperial/Metric

DISCOUNT CODE/ PRODUCT CODE		DESCRIPTION	PRICE
P	PVCISKA0050	0.5in x 20mm Socket adaptor, P P (16 bar)	£ POA
P	PVCISKA0075	0.75in x 25mm Socket adaptor, P P (16 bar)	£ POA
P	PVCISKA0100	1in x 32mm Socket adaptor, P P (16 bar)	£ POA
P	PVCISKA0125	1.25in x 40mm Socket adaptor, P P (16 bar)	£ POA
P	PVCISKA0150	1.5in x 50mm Socket adaptor, P P (16 bar)	£ POA
P	PVCISKA0200	2in x 63mm Socket adaptor, P P (16 bar)	£ POA
P	PVCISKA0300	3in x 90mm Socket adaptor, P P (16 bar)	£ POA
P	PVCISKA0400	4in x 110mm Socket adaptor, P P (16 bar)	£ POA

Socket Unions - Imperial

P	PVCISKU0050	0.5in Grey PVC Socket Union P P 15 Bar	£ POA
P	PVCISKU0075	0.75in Grey PVC Socket Union P P 15 Bar	£ POA
P	PVCISKU0100	1in Grey PVC Socket Union P P 15 Bar	£ POA
P	PVCISKU0125	1.25in Grey PVC Socket Union P P 15 Bar	£ POA
P	PVCISKU0150	1.5in Grey PVC Socket Union P P 15 Bar	£ POA
P	PVCISKU0200	2in Grey PVC Socket Union P P 15 Bar	£ POA
P	PVCISKU0250	2.5in Grey PVC Socket Union P P 9 Bar	£ POA
P	PVCISKU0300	3in Grey PVC Socket Union P P 9 Bar	£ POA
P	PVCISKU0400	4in Grey PVC Socket Union P P 9 Bar	£ POA

Plain Sockets - Imperial

P	PVCISKP0050	0.5in Grey PVC Socket P P 15 Bar	£ POA
P	PVCISKP0075	0.75in Grey PVC Socket P P 15 Bar	£ POA
P	PVCISKP0100	1in Grey PVC Socket P P 15 Bar	£ POA
P	PVCISKP0125	1.25in Grey PVC Socket P P 15 Bar	£ POA
P	PVCISKP0150	1.5in Grey PVC Socket P P 15 Bar	£ POA
P	PVCISKP0200	2in Grey PVC Socket P P 15 Bar	£ POA
P	PVCISKP0250	2.5in Grey PVC Socket P P 15 Bar	£ POA
P	PVCISKP0300	3in Grey PVC Socket P P 15 Bar	£ POA
P	PVCISKP0400	4in Grey PVC Socket P P 15 Bar	£ POA
P	PVCISKP0500	5in Grey PVC Socket P P 15 Bar	£ POA
P	PVCISKP0600	6in Grey PVC Socket P P 9 Bar	£ POA
P	PVCISKP0800	8in Grey PVC Socket P P 9 Bar	£ POA

Barrel Nipples - Imperial

P	PVCIPMN0050	0.5in Grey PVC Barrel Nipple P T	£ POA
P	PVCIPMN0075	0.75in Grey PVC Barrel Nipple P T	£ POA
P	PVCIPMN0125	1.25in Grey PVC Barrel Nipple P T	£ POA
P	PVCIPMN0150	1.5in Grey PVC Barrel Nipple P T	£ POA
P	PVCIPMN0100	1in Grey PVC Barrel Nipple P T	£ POA
P	PVCIPMN0250	2.5in Grey PVC Barrel Nipple P T	£ POA
P	PVCIPMN0200	2in Grey PVC Barrel Nipple P T	£ POA
P	PVCIPMN0300	3in Grey PVC Barrel Nipple P T	£ POA
P	PVCIPMN0400	4in Grey PVC Barrel Nipple P T	£ POA

Double Union Check Valves - Imperial

P	PVCIDCV0050	0.5in Grey PVC Double Union Check Valve	£ POA
P	PVCIDCV0075	0.75in Grey PVC Double Union Check Valve	£ POA
P	PVCIDCV0100	1in Grey PVC Double Union Check Valve	£ POA
P	PVCIDCV0125	1.25in Grey PVC Double Union Check Valve	£ POA
P	PVCIDCV0150	1.5in Grey PVC Double Union Check Valve	£ POA
P	PVCIDCV0200	2in Grey PVC Double Union Check Valve	£ POA
P	PVCIDCV0250	2.5in Grey PVC Double Union Check Valve	£ POA
P	PVCIDCV0300	3in Grey PVC Double Union Check Valve	£ POA

Double Union Ball Valves - Imperial

DISCOUNT CODE/ PRODUCT CODE		DESCRIPTION	PRICE
P	PVCIDBV0050	0.5in Grey PVC Double Union Ball Valve	£ POA
P	PVCIDBV0075	0.75in Grey PVC Double Union Ball Valve	£ POA
P	PVCIDBV0100	1in Grey PVC Double Union Ball Valve	£ POA
P	PVCIDBV0125	1.25in Grey PVC Double Union Ball Valve	£ POA
P	PVCIDBV0150	1.5in Grey PVC Double Union Ball Valve	£ POA
P	PVCIDBV0200	2in Grey PVC Double Union Ball Valve	£ POA
P	PVCIDBV0250	2.5in Grey PVC Double Union Ball Valve	£ POA
P	PVCIDBV0300	3in Grey PVC Double Union Ball Valve	£ POA

Adaptors - Imperial

P	PVCIPFA0050	0.5in Grey PVC Adaptor MP FT (9 bar)	£ POA
P	PVCIPFA0075	0.75in Grey PVC Adaptor MP FT (9 bar)	£ POA
P	PVCIPFA0100	1in Grey PVC Adaptor MP FT (9 bar)	£ POA
P	PVCIPFA0125	1.25in Grey PVC Adaptor MP FT (9 bar)	£ POA
P	PVCIPFA0150	1.5in Grey PVC Adaptor MP FT (9 bar)	£ POA
P	PVCIPFA0200	2in Grey PVC Adaptor MP FT (9 bar)	£ POA
P	PVCIPFA0250	2.5in Grey PVC Adaptor MP FT (9 bar)	£ POA
P	PVCIPFA0300	3in Grey PVC Adaptor MP FT (9 bar)	£ POA
P	PVCIPFA0400	4in Grey PVC Adaptor MP FT (9 bar)	£ POA
P	PVCIPMA0050	0.5in Grey PVC Adaptor MP MT (9 bar)	£ POA
P	PVCIPMA0075	0.75in Grey PVC Adaptor MP MT (9 bar)	£ POA
P	PVCIPMA0100	1in Grey PVC Adaptor MP MT (9 bar)	£ POA
P	PVCIPMA0125	1.25in Grey PVC Adaptor MP MT (9 bar)	£ POA
P	PVCIPMA0150	1.5in Grey PVC Adaptor MP MT (9 bar)	£ POA
P	PVCIPMA0200	2in Grey PVC Adaptor MP MT (9 bar)	£ POA
P	PVCIPMA0250	2.5in Grey PVC Adaptor MP MT (9 bar)	£ POA
P	PVCIPMA0300	3in Grey PVC Adaptor MP MT (9 bar)	£ POA
P	PVCIPMA0400	4in Grey PVC Adaptor MP MT (9 bar)	£ POA

Reducing Bushes - Imperial

P	PVCIRBU075050	0.75in x 0.5in Grey PVC Reducing Bush P P (15 bar)	£ POA
P	PVCIRBU100075	1in x 0.75in Grey PVC Reducing Bush P P (15 bar)	£ POA
P	PVCIRBU125100	1.25in x 1in Grey PVC Reducing Bush P P (15 bar)	£ POA
P	PVCIRBU150075	1.5in x 0.75in Grey PVC Reducing Bush P P (15 bar)	£ POA
P	PVCIRBU150100	1.5in x 1in Grey PVC Reducing Bush P P (15 bar)	£ POA
P	PVCIRBU150125	1.5in x 1.25in Grey PVC Reducing Bush P P (15 bar)	£ POA
P	PVCIRBU200150	2in x 1.5in Grey PVC Reducing Bush P P (15 bar)	£ POA
P	PVCIRBU250200	2.5in x 2in Grey PVC Reducing Bush P P (15 bar)	£ POA
P	PVCIRBU300200	3in x 2in Grey PVC Reducing Bush P P (15 bar)	£ POA
P	PVCIRBU400300	4in x 3in Grey PVC Reducing Bush P P (15 bar)	£ POA
P	PVCIRBU600400	6in x 4in Grey PVC Reducing Bush P P (9 bar)	£ POA
P	PVCIRBU800600	8in x 6in Grey PVC Reducing Bush P P (9 bar)	£ POA
P	PVCIRBB050037	1.5in x 0.375in Grey PVC Reducing Bush Plain/BSP	£ POA
P	PVCIRBB075050	0.75in x 0.5in Grey PVC Reducing Bush Plain/BSP	£ POA
P	PVCIRBB100075	1in x 0.75in Grey PVC Reducing Bush Plain/BSP	£ POA

Gaskets

P	PVCIEGK0300	3in EDPM Flat Gasket Full Face Flange	£ POA
P	PVCIEGK0400	4in EDPM Flat Gasket Full Face Flange	£ POA
P	PVCIEGK0600	6in EDPM Flat Gasket Full Face Flange	£ POA
P	PVCIEGK0800	8in EDPM Flat Gasket Full Face Flange	£ POA

Metric PVC Pipe & Fittings

Pipe - Metric

DISCOUNT CODE/	PRODUCT CODE	DESCRIPTION	PRICE
P	PVCMPIP165020	20mm PVC Pipe Grey 5m Length 16 Bar	£ POA
P	PVCMPIP165025	25mm PVC Pipe Grey 5m Length 16 Bar	£ POA
P	PVCMPIP165032	32mm PVC Pipe Grey 5m Length 16 Bar	£ POA
P	PVCMPIP105040	40mm PVC Pipe Grey 5m Length 10 Bar	£ POA
P	PVCMPIP165040	40mm PVC Pipe Grey 5m Length 16 Bar	£ POA
P	PVCMPIP105050	50mm PVC Pipe Grey 5m Length 10 Bar	£ POA
P	PVCMPIP165050	50mm PVC Pipe Grey 5m Length 16 Bar	£ POA
P	PVCMPIP105063	63mm PVC Pipe Grey 5m Length 10 Bar	£ POA
P	PVCMPIP165063	63mm PVC Pipe Grey 5m Length 16 Bar	£ POA
P	PVCMPIP105075	75mm PVC Pipe Grey 5m Length 10 Bar	£ POA
P	PVCMPIP165075	75mm PVC Pipe Grey 5m Length 16 Bar	£ POA
P	PVCMPIP105090	90mm PVC Pipe Grey 5m Length 10 Bar	£ POA
P	PVCMPIP165090	90mm PVC Pipe Grey 5m Length 16 Bar	£ POA
P	PVCMPIP105110	110mm PVC Pipe Grey 5m Length 10 Bar	£ POA
P	PVCMPIP165110	110mm PVC Pipe Grey 5m Length 16 Bar	£ POA
P	PVCMPIP105125	125mm PVC Pipe Grey 5m Length 10 Bar	£ POA
P	PVCMPIP105140	140mm PVC Pipe Grey 5m Length 10 Bar	£ POA
P	PVCMPIP105160	160mm PVC Pipe Grey 5m Length 10 Bar	£ POA
P	PVCMPIP165160	160mm PVC Pipe Grey 5m Length 16 Bar	£ POA
P	PVCMPIP105200	200mm PVC Pipe Grey 5m Length 10 Bar	£ POA

End Caps - Metric

P	PVCMCAP0250	25mm Grey PVC Cap P	£ POA
P	PVCMCAP0320	32mm Grey PVC Cap P	£ POA
P	PVCMCAP0400	40mm Grey PVC Cap P	£ POA
P	PVCMCAP0500	50mm Grey PVC Cap P	£ POA
P	PVCMCAP0630	63mm Grey PVC Cap P	£ POA
P	PVCMCAP0750	75mm Grey PVC Cap P	£ POA
P	PVCMCAP0900	90mm Grey PVC Cap P	£ POA
P	PVCMCAP1100	110mm Grey PVC Cap P	£ POA
P	PVCMCAP1250	125mm Grey PVC Cap P	£ POA
P	PVCMCAP1400	140mm Grey PVC Cap P	£ POA
P	PVCMCAP1600	160mm Grey PVC Cap P	£ POA
P	PVCMCAP2000	200mm Grey PVC Cap P	£ POA

Butterfly Valve Kit - Metric

DISCOUNT CODE/	PRODUCT CODE	DESCRIPTION	PRICE
P	PVCMBVK0750	75mm Grey PVC Butterfly Valve Kit	£ POA
P	PVCMBVK0900	90mm Grey PVC Butterfly Valve Kit	£ POA
P	PVCMBVK1100	110mm Grey PVC Butterfly Valve Kit	£ POA
P	PVCMBVK1250	125mm Grey PVC Butterfly Valve Kit	£ POA
P	PVCMBVK1400	140mm Grey PVC Butterfly Valve Kit	£ POA
P	PVCMBVK1600	160mm Grey PVC Butterfly Valve Kit	£ POA
P	PVCMBVK2000	200mm Grey PVC Butterfly Valve Kit	£ POA
P	PVCMBVK2250	225mm Grey PVC Butterfly Valve Kit	£ POA

45 Degree Elbows - Metric

DISCOUNT CODE/	PRODUCT CODE	DESCRIPTION	PRICE
P	PVCM45E0250	25mm Grey PVC 45 Elbow P P	£ POA
P	PVCM45E0320	32mm Grey PVC 45 Elbow P P	£ POA
P	PVCM45E0400	40mm Grey PVC 45 Elbow P P	£ POA
P	PVCM45E0500	50mm Grey PVC 45 Elbow P P	£ POA
P	PVCM45E0630	63mm Grey PVC 45 Elbow P P	£ POA
P	PVCM45E0750	75mm Grey PVC 45 Elbow P P	£ POA
P	PVCM45E0900	90mm Grey PVC 45 Elbow P P	£ POA
P	PVCM45E1100	110mm Grey PVC 45 Elbow P P	£ POA
P	PVCM45E1250	125mm Grey PVC 45 Elbow P P	£ POA
P	PVCM45E1400	140mm Grey PVC 45 Elbow P P	£ POA
P	PVCM45E1600	160mm Grey PVC 45 Elbow P P	£ POA
P	PVCM45E2000	200mm Grey PVC 45 Elbow P P	£ POA
P	PVCM45E2250	225mm Grey PVC 45 Elbow P P	£ POA
P	PVCM45E2500	250mm Grey PVC 45 Elbow P P	£ POA
P	PVCM45E3150	315mm Grey PVC 45 Elbow P P	£ POA

90 Degree Elbows - Metric

P	PVCM90E0250	25mm Grey PVC 90 Elbow P P	£ POA
P	PVCM90E0320	32mm Grey PVC 90 Elbow P P	£ POA
P	PVCM90E0400	40mm Grey PVC 90 Elbow P P	£ POA
P	PVCM90E0500	50mm Grey PVC 90 Elbow P P	£ POA
P	PVCM90E0630	63mm Grey PVC 90 Elbow P P	£ POA
P	PVCM90E0750	75mm Grey PVC 90 Elbow P P	£ POA
P	PVCM90E0900	90mm Grey PVC 90 Elbow P P	£ POA
P	PVCM90E1100	110mm Grey PVC 90 Elbow P P	£ POA
P	PVCM90E1250	125mm Grey PVC 90 Elbow P P	£ POA
P	PVCM90E1400	140mm Grey PVC 90 Elbow P P	£ POA
P	PVCM90E1600	160mm Grey PVC 90 Elbow P P	£ POA
P	PVCM90E2000	200mm Grey PVC 90 Elbow P P	£ POA
P	PVCM90E2250	225mm Grey PVC 90 Elbow P P	£ POA
P	PVCM90E2500	250mm Grey PVC 90 Elbow P P	£ POA
P	PVCM90E3150	315mm Grey PVC 90 Elbow P P	£ POA

Equal Tees - Metric

P	PVCM90T0250	25mm Grey PVC Tee Joint P P P	£ POA
P	PVCM90T0320	32mm Grey PVC Tee Joint P P P	£ POA
P	PVCM90T0400	40mm Grey PVC Tee Joint P P P	£ POA
P	PVCM90T0500	50mm Grey PVC Tee Joint P P P	£ POA
P	PVCM90T0630	63mm Grey PVC Tee Joint P P P	£ POA
P	PVCM90T0750	75mm Grey PVC Tee Joint P P P	£ POA
P	PVCM90T0900	90mm Grey PVC Tee Joint P P P	£ POA
P	PVCM90T1100	110mm Grey PVC Tee Joint P P P	£ POA
P	PVCM90T1250	125mm Grey PVC Tee Joint P P P	£ POA
P	PVCM90T1400	140mm Grey PVC Tee Joint P P P	£ POA
P	PVCM90T1600	160mm Grey PVC Tee Joint P P P	£ POA
P	PVCM90T2000	200mm Grey PVC Tee Joint P P P	£ POA
P	PVCM90T2250	225mm Grey PVC Tee Joint P P P	£ POA
P	PVCM90T2500	250mm Grey PVC Tee Joint P P P	£ POA
P	PVCM90T3150	315mm Grey PVC Tee Joint P P P	£ POA

Metric PVC Pipe & Fittings

Reducing Sockets - Metric

DISCOUNT CODE/ PRODUCT CODE		DESCRIPTION	PRICE
P	PVCMRSK040032	40mm x 32mm Grey PVC Reducing socket P P	£ POA
P	PVCMRSK050032	50mm x 32mm Grey PV Reducing socket P P	£ POA
P	PVCMRSK063050	63mm x 50mm Grey PV Reducing socket P P	£ POA
P	PVCMRSK075063	75mm x 63mm Grey PV Reducing socket P P	£ POA
P	PVCMRSK090063	90mm x 63mm Grey PV Reducing socket P P	£ POA
P	PVCMRSK110075	110mm x 75mm Grey PV Reducing socket P P	£ POA
P	PVCMRSK125090	125mm x 90mm Grey PV Reducing socket P P	£ POA
P	PVCMRSK140110	140mm x 110mm Grey PV Reducing socket P P	£ POA
P	PVCMRSK160140	160mm x 140mm Grey PV Reducing socket P P	£ POA

Plain Sockets - Metric

P	PVCMSKP0250	25mm Grey PVC Socket plain	£ POA
P	PVCMSKP0320	32mm Grey PVC Socket plain	£ POA
P	PVCMSKP0400	40mm Grey PVC Socket plain	£ POA
P	PVCMSKP0500	50mm Grey PVC Socket plain	£ POA
P	PVCMSKP0630	63mm Grey PVC Socket plain	£ POA
P	PVCMSKP0750	75mm Grey PVC Socket plain	£ POA
P	PVCMSKP0900	90mm Grey PVC Socket plain	£ POA
P	PVCMSKP1100	110mm Grey PVC Socket plain	£ POA
P	PVCMSKP1250	125mm Grey PVC Socket plain	£ POA
P	PVCMSKP1400	140mm Grey PVC Socket plain	£ POA
P	PVCMSKP1600	160mm Grey PVC Socket plain	£ POA
P	PVCMSKP2000	200mm Grey PVC Socket plain	£ POA
P	PVCMSKP2250	225mm Grey PVC Socket plain	£ POA
P	PVCMSKP2500	250mm Grey PVC Socket plain	£ POA
P	PVCMSKP3150	315mm Grey PVC Socket plain	£ POA

Backing Rings - Metric

P	PVCMBKR0500	50mm Grey PVC Backing ring	£ POA
P	PVCMBKR0630	63mm Grey PVC Backing ring	£ POA
P	PVCMBKR0750	75mm Grey PVC Backing ring	£ POA
P	PVCMBKR0900	90mm Grey PVC Backing ring	£ POA
P	PVCMBKR1100	110mm Grey PVC Backing ring	£ POA
P	PVCMBKR1250	125mm Grey PVC Backing ring	£ POA
P	PVCMBKR1400	140mm Grey PVC Backing ring	£ POA
P	PVCMBKR1600	160mm Grey PVC Backing ring	£ POA
P	PVCMBKR2250	225mm Grey PVC Backing ring	£ POA
P	PVCMBKR2500	250mm Grey PVC Backing ring	£ POA
P	PVCMBKR3150	315mm Grey PVC Backing ring	£ POA

Double Union Ball Valves - Metric

P	PVCMDBV0250	25mm Grey PVC Double Union Ball Valve	£ POA
P	PVCMDBV0320	32mm Grey PVC Double Union Ball Valve	£ POA
P	PVCMDBV0400	40mm Grey PVC Double Union Ball Valve	£ POA
P	PVCMDBV0500	50mm Grey PVC Double Union Ball Valve	£ POA
P	PVCMDBV0630	63mm Grey PVC Double Union Ball Valve	£ POA
P	PVCMDBV0750	75mm Grey PVC Double Union Ball Valve	£ POA
P	PVCMDBV0900	90mm Grey PVC Double Union Ball Valve	£ POA
P	PVCMDBV1100	110mm Grey PVC Double Union Ball Valve	£ POA

Plain Unions - Metric

DISCOUNT CODE/ PRODUCT CODE		DESCRIPTION	PRICE
P	PVCMUP0200	PVC-U Union Plain 20mm	£ POA
P	PVCMUP0250	PVC-U Union Plain 25mm	£ POA
P	PVCMUP0320	PVC-U Union Plain 32mm	£ POA
P	PVCMUP0400	PVC-U Union Plain 40mm	£ POA
P	PVCMUP0500	PVC-U Union Plain 50mm	£ POA
P	PVCMUP0630	PVC-U Union Plain 63mm	£ POA
P	PVCMUP0750	PVC-U Union Plain 75mm	£ POA
P	PVCMUP0900	PVC-U Union Plain 90mm	£ POA
P	PVCMUP1100	PVC-U Union Plain 110mm	£ POA

Reducing Bushes - Metric

P	PVCMRBU032025	32mm x 25mm Grey PVC Reducing Bush P P	£ POA
P	PVCMRBU040032	40mm x 32mm Grey PVC Reducing Bush P P	£ POA
P	PVCMRBU050040	50mm x 40mm Grey PVC Reducing Bush P P	£ POA
P	PVCMRBU063050	63mm x 50mm Grey PVC Reducing Bush P P	£ POA
P	PVCMRBU075063	75mm x 63mm Grey PVC Reducing Bush P P	£ POA
P	PVCMRBU090075	90mm x 75mm Grey PVC Reducing Bush P P	£ POA
P	PVCMRBU110090	110mm x 90mm Grey PVC Reducing Bush P P	£ POA
P	PVCMRBU125110	125mm x 110mm Grey PVC Reducing Bush P P	£ POA
P	PVCMRBU140125	140mm x 125mm Grey PVC Reducing Bush P P	£ POA
P	PVCMRBU160140	160mm x 140mm Grey PVC Reducing Bush P P	£ POA

Stub Flanges - Metric

P	PVCMSFL0500	50mm Grey PVC Stub flange P P	£ POA
P	PVCMSFL0630	63mm Grey PVC Stub flange P P	£ POA
P	PVCMSFL0750	75mm Grey PVC Stub flange P P	£ POA
P	PVCMSFL0900	90mm Grey PVC Stub flange P P	£ POA
P	PVCMSFL1100	110mm Grey PVC Stub flange P P	£ POA
P	PVCMSFL1250	125mm Grey PVC Stub flange P P	£ POA
P	PVCMSFL1400	140mm Grey PVC Stub flange P P	£ POA
P	PVCMSFL1600	160mm Grey PVC Stub flange P P	£ POA
P	PVCMSFL2250	225mm Grey PVC Stub flange P P	£ POA
P	PVCMSFL2500	250mm Grey PVC Stub flange P P	£ POA
P	PVCMSFL3150	315mm Grey PVC Stub flange P P	£ POA

Stub Gaskets - Metric

P	PVCMSGK0500	50mm Flat Stub gasket	£ POA
P	PVCMSGK0630	63mm Flat Stub gasket	£ POA
P	PVCMSGK0750	75mm Flat Stub gasket	£ POA
P	PVCMSGK0900	90mm Flat Stub gasket	£ POA
P	PVCMSGK1100	110mm Flat Stub gasket	£ POA
P	PVCMSGK1250	125mm Flat Stub gasket	£ POA
P	PVCMSGK1400	140mm Flat Stub gasket	£ POA
P	PVCMSGK1600	160mm Flat Stub gasket	£ POA
P	PVCMSGK2000	200mm Flat Stub gasket	£ POA
P	PVCMSGK2250	225mm Flat Stub gasket	£ POA

POLICY FOR RETURNING GOODS

7 Day Returns

If you do not require a product and it is within seven working days from the day after delivery, the item is unused, in its original packaging with all parts, tools and manuals and in a saleable condition you may request an RMA (returns number) providing it's not one of the following:

- Made to order item
- Special order item
- Non stock item
- Water Treatment item
- Adhesives, paints or joint mix
- Above Ground Swimming Pools and associated products
- Toys, Games and Inflatables
- Any other item marked in the price list as non-returnable

You are responsible for the costs and arranging the return of the items, original delivery charges will not be refunded.

28 Day Returns

If you do not require a product and it is within twenty eight working days from the day after delivery, the item is unused, in its original packaging with all parts, tools and manuals and in a saleable condition you may request an RMA (returns number) providing it is and standard stocked item at Plastica and not one of the following:

- Water Treatment item
- Adhesives, paints or joint mix
- Above Ground Swimming Pools and associated products
- Toys, Games and Inflatables
- Made to order
- Special order
- Non stock item
- Any other item marked in the price list as non-returnable

You will incur a 30% or £30 re-stocking charge per order, whichever is the greater. You are responsible for the costs and arranging the return of the items, original delivery charges will not be refunded.

28 Day Returns – Non-Stock Heaters & Pumps

You may request an RMA (returns number) for non-stock heaters and pumps manufactured by Calpeda, Elecro or Waterco if it is within twenty eight working days from the day after delivery, the item is unused, in its original packaging with all parts, tools and manuals and in a saleable condition.

You will incur a 30% or £150 re-stocking charge per item, whichever is the greater. You are responsible for the costs and arranging the return of the items, original delivery charges will not be refunded.

Please email **returns@plastica.support** to request your RMA (returns number).

Returns for Exchange

An admin fee will be applied for exchanging a product. Any product exchange will be excluded from the 7 day returns policy and you be subject to a £25 charge.

For example: if you order a Winter Debris cover and want to change the fixings, you will incur this charge.

WARRANTY CLAIMS

Plastica warranties all its products to be free from manufacturing defects for 6 months, excluding spare parts and consumables where they are warrantied for 90 days only. Please refer to individual products for any extended manufacturers warranty. The warranty starts the day an item is delivered to the consumer. Where items are held in stock and therefore a delay in the supply chain between purchase from Plastica and the consumer purchase the warranty start date can be delayed by a maximum of 1 year. Proof of purchase by the consumer must be supplied, otherwise the warranty will commence the day of purchase from Plastica.

When making a warranty claim you must supply photos and where applicable a video showing the issue.

Items will be repaired where possible by supplying replacement parts, in cases where an item can't be repaired on site the item will need to be returned to Plastica. In the first 6 months of the warranty the cost of return (mainland UK addresses only) will be covered by Plastica. For items with a longer warranty; after 6 months the cost of returning the item to Plastica is the responsibility of the consumer.

Where an item cannot be repaired, or it is uneconomical to repair Plastica will supply a replacement of similar age and condition. If no suitable replacement can be supplied Plastica will refund the original purchase price if it is within the first 6 months in full (excluding spare parts and consumable items where this is limited to 90 days), after 6 months Plastica will process a partial refund based on the remaining warranty period.

The warranty is valid only if the item serial number or other product labels of identification are clearly visible and have not be removed or illegible. Warranty will also be voided where unauthorised attempts have been made to access or repair non-serviceable parts.

Exceptions that may result in denial of a warranty claim:

1. Damage caused by careless handling, repackaging or secondary shipping not carried out by Plastica.
2. Damage due to misapplication, misuse, abuse, lack of maintenance or failure to operate equipment as specified in the owner's manual.
3. Damage caused by failure to install products as specified in the owner's manual.
4. Damage caused due to unauthorised product modifications.
5. Damage caused by negligence, or failure to properly maintain products as specified in the owner's manual.
6. Damage caused by failure to maintain water chemistry in conformity with the standards of the pool and spa industry for any length of time.
7. Damage caused by water freezing inside the product.
8. Accidental damage, fire or any other event beyond the control of Plastica.
9. Damage caused by any flooding where the item is installed.

To make a warranty claim please email: **warranty@plastica.support** with photos and/or videos identifying the issue along with details of purchase from Plastica and proof of sale to the consumer. Photos and videos can also be sent to our warranty claim mobile number (07520 660336), please include your customer account number and reference in the text message.

PLASTICA TRADING TERMS

All orders processed are subject to Plastica Ltd standard Conditions of Sale. These are available on request from our Customer Services department and will appear in full at the end of our account application forms.

Conditions of Sale Summary:

- All products and services listed are subject to standard rate of VAT
- All prices are listed in £ Sterling
- We retain the right to alter prices without notice
- Returned goods policy as defined on page 279
- Goods marked with the non return symbol or listed as excluded products in our returns policy can not be returned unless faulty under warranty.
- For invoice purposes all liners and covers are costed using whole square metre prices only
- Delivery charges are applied as per page 4 and 5
- We reserve the right to change delivery charges without prior notice
- Certain items as indicated may be subject to additional carriage charges
- Pictures can only be used with the prior consent of Plastica Ltd

Delivery
On receipt of your delivery you must inspect the packages and contents for any damages or loss, if you are unable to check your delivery you must sign for it as DAMAGED or MISSING GOODS. Failure to do so will void any later claims for damage or missing items.

All delivery services are chargeable unless specified otherwise or your order exceeds the order value threshold whereby standard delivery will be free, see pages 4 and 5 for exclusions.

All delivery services are provided in good faith and are not guaranteed, in the event of a failure in a timed service (AM, Before 10.30am or Saturday delivery). Plastica will only credit the difference between that service and our standard delivery charges.

Please ensure before planning work that the goods are confirmed as delivered, Plastica accept no liability for delays to work caused by late, damaged or missing goods.

Transaction Limits
Every order is treated as a separate transaction, meaning that your order will be processed as soon as received by our Customer Services department. Goods cannot be added to an existing order once received.

Where products are made to order or out of stock your order will be shipped when all products are available, or you may split your order in to two. The first order being all products that are available to ship at time of placing the order and a second order with all the products that are made to order or were out of stock. The second order will be despatched when all products are available, delivery charges will be calculated based on the products on each order.

Plastica Ltd reserve the right to add a surcharge of at least 1% to all payments made by card, the surcharge will be at the percentage cost incurred for the particular payment method used. Using a business debit or credit card or an American Express card will incur a higher surcharge.

Wherever possible please make payment via bank transfer.

E & O E
Errors and Omissions Excepted.

TRADEMARKS

The following names are registered trademarks of Plastica Ltd:
- Argonaut
- Endurance
- Extreme
- HeatSeeker
- Hy Pro-70
- iFlo
- Piranha Clip
- Plastica P
- Plastica Poolsaver
- Relax
- Summerlong
- SwimMaster
- Venetian
- Wiinterlong

Plastica

2024

Price List

Plastica Limited, Perimeter House, Napier Road
St Leonards-on-Sea, East Sussex TN38 9NY UK

+44 (0) 1424 857857 info@plasticapools.net
www.plasticapools.net

Find us on